INSTRUCTIONS FOR SUBMITTING BIDS DOWNLOADED VIA THE INTERNET

1. Envelope should be addressed to:
   New York State Thruway Authority
   Attn: Purchasing Department
   200 Southern Boulevard
   Albany, New York 12209

2. Return address of company sending bid should be in the upper left-hand corner on the front of the envelope.

3. Envelope should be **CLEARLY** marked under the return address with the following information:

   Bid Number
   Time & Date of Bid Opening
   The words "**BID ENCLOSED**" OR "**NO BID**"

4. The Authority will not be responsible for bids that are not submitted in the above manner.

NOTE: Some letter/parcel carriers have been experiencing delays in their deliveries. Please take this into account when planning the submission of your bid.

Bureau of Purchasing
200 Southern Boulevard
Albany, New York 12209

Andrew Trombley, Director
(518) 471-5830
Fax: (518) 471-4442

Issue Date: June 21, 2023

INVITATION FOR BIDS

IFB #23028-909.37

Bid Opening: 1:00 p.m., July 13, 2023

Pre-Bid Meeting: 11:00 am, June 29, 2023
NYS Thruway HQ, 200 Southern Blvd, Albany NY 12209

~ Solicitation of bids for ~

NYS Thruway Headquarters Entrance Doors

This procurement is subject to and shall be conducted in accordance with the Thruway Authority Guidelines Regarding Permissible Contacts During a Procurement and the Prohibition of Inappropriate Lobbying Influence (attached hereto as Exhibit 1). All questions concerning this IFB must be addressed to the person listed herein. If the person listed below is not available, questions must be directed to Tammi Ferraro-Earl at Tammi.Ferraro-Earl@thruway.ny.gov. For matters related to MWBE and SDVOB issues only, contact Elonda Mackey at email: Elonda.Mackey@thruway.ny.gov or phone: 518-471-5830. Bidders and prospective Bidders may not approach any other Authority officer, employee, contractor or agent or any other State entity relative to this IFB (except as provided in Exhibit 1).

Address Inquiries To: David Coffey (518)436-2731
Email: David.Coffey@thruway.ny.gov

GENERAL CONTENTS

	Page
Detailed Specification With Drawings	2
Terms & Conditions	4

1.0 SCOPE

It is the intent of this specification to describe the removal of existing & furnish & installment of new storefront framing, doors & glass, handicap closer motors & push plates per attached plans at following location. Provide labor (the removal and installation of the new doors and handicap closer motors and push plates) and material to install new storefront framing, doors and glass, per attached plans at the following location:

NYS Thruway Headquarters
200 Southern Boulevard
P.O. Box 189
Albany NY, 12201

2.0 BIDDER QUALIFICATIONS

No bid will be considered or award made unless the firm or representative submitting the bid can prove to the Authority's satisfaction that it meets the following conditions:

Employs on a full-time basis, personnel thoroughly experienced in the performance of the type of work specified.

Has satisfactorily completed contracts equal to the nature and scope of the proposal for at least three years (unless the bidder's performance record indicates a lesser time requirement as determined by the Director of Purchasing).

A bid from a representative may require a certificate executed by the manufacturer stating that the said bidder is authorized to supply the merchandise offered with the guaranteed delivery time as stated in the bid.

3.0 PRE-BID MEETING

A pre-bid meeting for bidders will be held on **11:00 a.m., June 29, 2023** at the job site: NYS Thruway Authority Headquarters 200 Southern Boulevard, Albany NY 12209. Although the pre-bid meeting is not mandatory, it is strongly encouraged that an inspection of the site be made by each bidder to take measurements and ascertain the extent of the work to be done.

Written Notice to Bidders advising of questions and responses as a result of the pre-bid meeting will be provided to potential bidders. Questions and responses that result in a material change to the bid will result in the issuance of an Addendum.

There are measures in place to protect the safety and health of employees and visitors alike. If you plan on attending the pre-bid meeting, you must first register with the contact of record before the scheduled pre-bid meeting in order for a sufficient sized room to be located to accommodate social distancing for all attendees. You must also complete a Wellness Survey the day of the pre-bid meeting before you will be allowed to enter the building. The Wellness Survey is available at the following link: http://intsrv/intranet/forms/pdf/TA-N3738.pdf

4.0 SPECIFICS

Item 1: Remove existing storefront Framing & Doors & Glass & Furnish & Install Aluminum Doors & Frames, Closer Motors & Push Plates per attached plans. Two openings at each end of bridge, each has (1) one pair of 6'0" X 7'0" doors with single 32" doors on each side with Transcoms 149" X 99.5". Also all electrical assembling and disassembling to be completed as well.

This work must be done on weekends during the day. Work can began as early as 6am & continue until the building is secured. Contractor must coordinate work with Site Supervisor minimum 48 hours prior to start of work. Thruway site Supervisor or designee will be present while work is performed.

5.0 QUALITY ASSURANCE

Pre-Award Consultation

After evaluation of bids and before formal "Notice of Award" is issued, the proposed contractor(s) may be requested to meet with the Thruway Authority Director of Purchasing at the Authority's main office, 200 Southern Boulevard, Albany, New York.

The Director of Purchasing will notify the prospective contractor(s) of the time(s) and date(s) of meeting(s).

Inspections

The Authority may conduct inspections of the contractor's work at any time during the life of this contract. In addition, a joint inspection by the Authority and the contractor's representative may be required to verify completion of all work in accordance with the contract requirements.

6.0 DELIVERY

The items specified will be installed at the following location:

New York State Thruway Headquarters
200 Southern Boulevard
Albany NY 12209

7.0 PACKAGING

Not applicable.

8.0 TRAINING

Not applicable.

9.0 SUBMITTALS

The bidder shall submit with its bid detailed specifications, circulars and all necessary data on the product to be furnished. If the product offered differs from the provisions listed, such differences must be explained in detail. Failure to submit any of the above data may result in rejection of the bid. The Thruway Authority, however, reserves the right to request any additional information deemed necessary for the proper evaluation of bids.

PR#

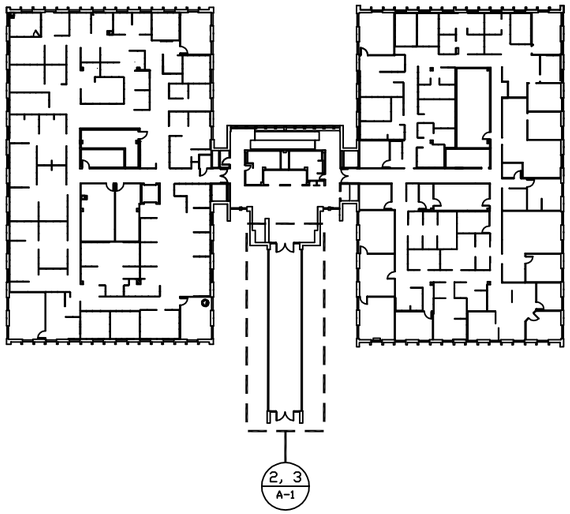

WORK LOCATION PLAN (1)

1/32" = 1'-0"

BASIS OF DESIGN:

1. ALL NEW DOORS TO BE KAWNEER TUFFLINE 350/500 SERIES.
2. ALL ACTIVATING DOOR SWITCHES TO BE NORTON 531 SERIES.
3. ALL NEW DOORS TO BE EQUIPPED WITH NORTON 6341 SERIES CLOSERS.
4. ALL NEW DOORS TO BE EQUIPPED WITH CONTINUOUS PIANO HINGES.
5. THRESHOLDS BY KAWNEER, TO BE MADE FROM EXTRUDED ALUMINUM, ONE PIECE PER DOOR OPENING, WITH RIBBED SURFACE.
6. ALL PANIC HARDWARE, PULL HANDLES, AND PUSH BARS BY KAWNEER.

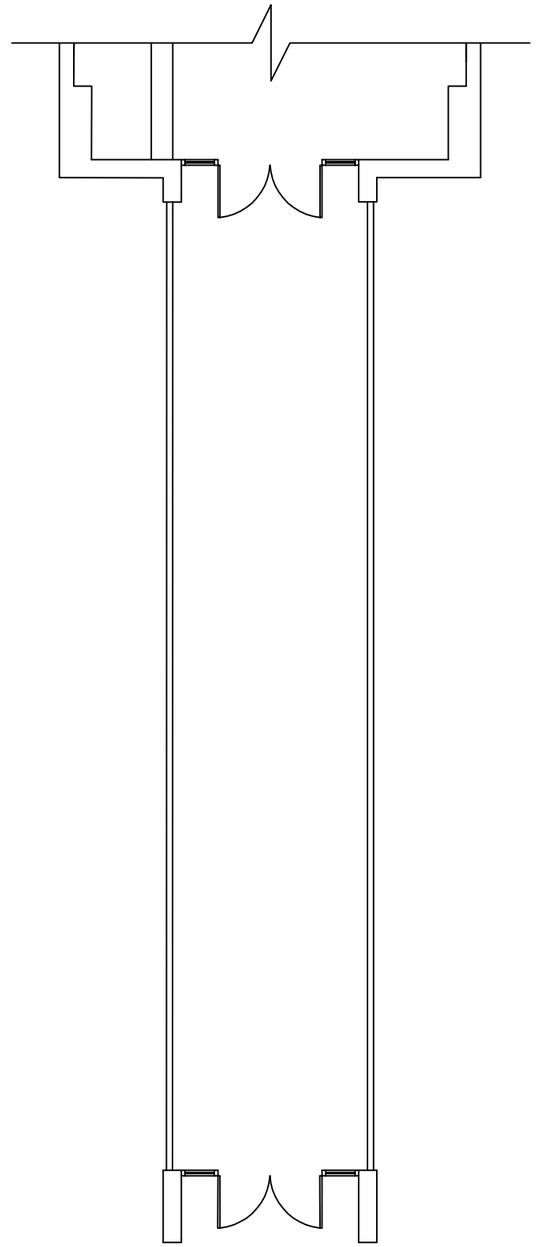

BRIDGE PLAN – EXISTING (2)

3/16" = 1'-0"

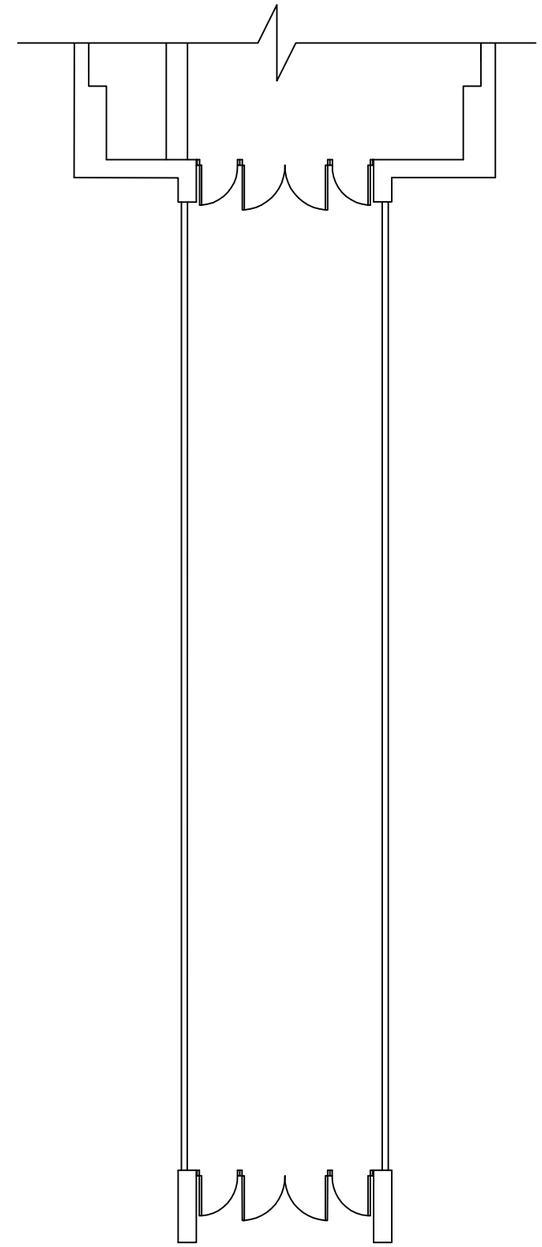

BRIDGE PLAN – NEW WORK (3)

3/16" = 1'-0"

NOTE
SCALE REDUCTION

THESE REDUCED PLANS MAY NOT BE EXACTLY TO SCALE. ALL INDICATED SCALES ARE REDUCED TO APPROXIMATELY HALF SIZE.

0 1 2 3 4

ALTERED ON:	AFFIXED ON:
SIGNATURE: STAMP:	SIGNATURE: STAMP:

IT IS A VIOLATION OF LAW FOR ANY PERSON, UNLESS THEY ARE ACTING UNDER THE DIRECTION OF A LICENSED PROFESSIONAL ENGINEER, ARCHITECT, LANDSCAPE ARCHITECT, OR LAND SURVEYOR, TO ALTER AN ITEM IN ANY WAY. IF AN ITEM BEARING THE STAMP OF A LICENSED PROFESSIONAL IS ALTERED, THE ALTERING ENGINEER, ARCHITECT, LANDSCAPE ARCHITECT, OR LAND SURVEYOR SHALL STAMP THE DOCUMENT AND INCLUDE THE NOTATION "ALTERED BY" FOLLOWED BY THEIR SIGNATURE. THE DATE OF SUCH ALTERATION, AND A SPECIFIC DESCRIPTION OF THE ALTERATION.

REVISIONS

DATE	DESCRIPTION	BY	SYM.

NEW YORK STATE OF OPPORTUNITY. Thruway Authority

TITLE OF PROJECT
TITLE OF PROJECT LINE 1
TITLE OF PROJECT LINE 2

LOCATION OF PROJECT
LOCATION OF PROJECT LINE 1
LOCATION OF PROJECT LINE 2

TITLE OF DRAWING
TITLE OF DRAWING
TITLE OF DRAWING
TITLE OF DRAWING

CONTRACT NUMBER: TA__ __-__A

DATE: XX/XX/XX

DRAWING NUMBER: A-1

TA NUMBER/DWGS/DWG NUMBER

DRAFTED BY: XXX CHECKED BY: XXX CHECKED BY: XXX DESIGNED BY: XXX BUREAU DIRECTOR: J. L. MORRIS

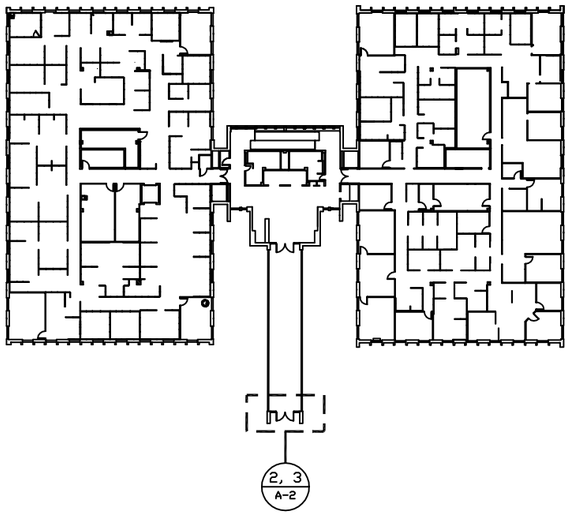

WORK LOCATION PLAN (1)

1/32" = 1'-0"

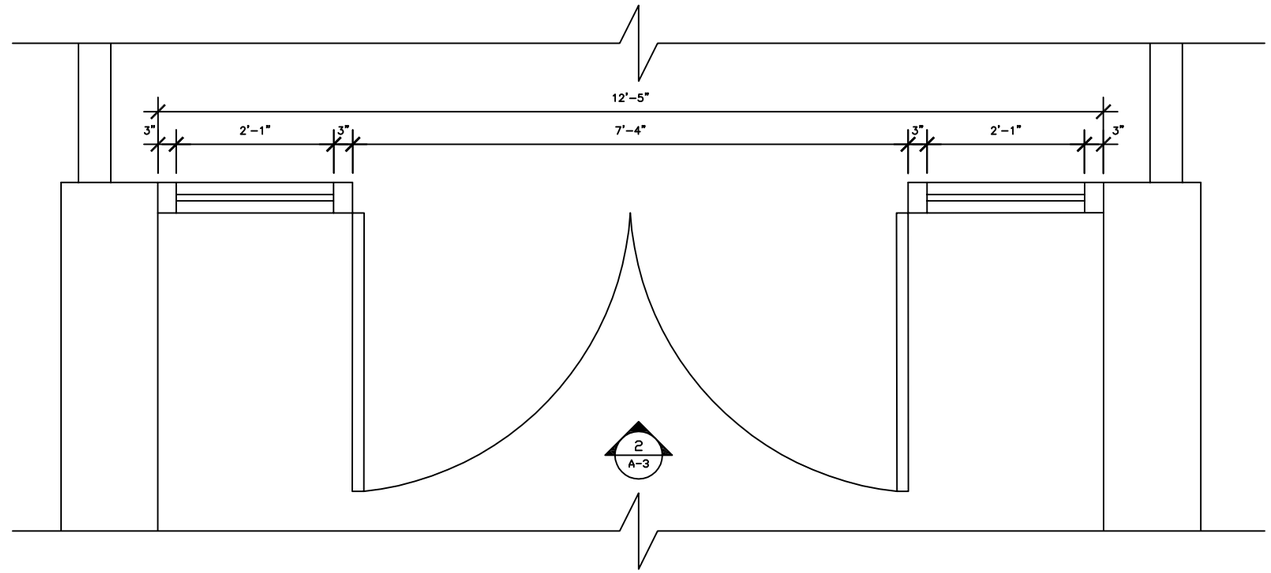

BRIDGE PLAN – EXISTING (2)

1" = 1'-0"

NOTE
SCALE REDUCTION

THESE REDUCED PLANS MAY NOT BE EXACTLY TO SCALE. ALL INDICATED SCALES ARE REDUCED TO APPROXIMATELY HALF SIZE.

0 1 2 3 4

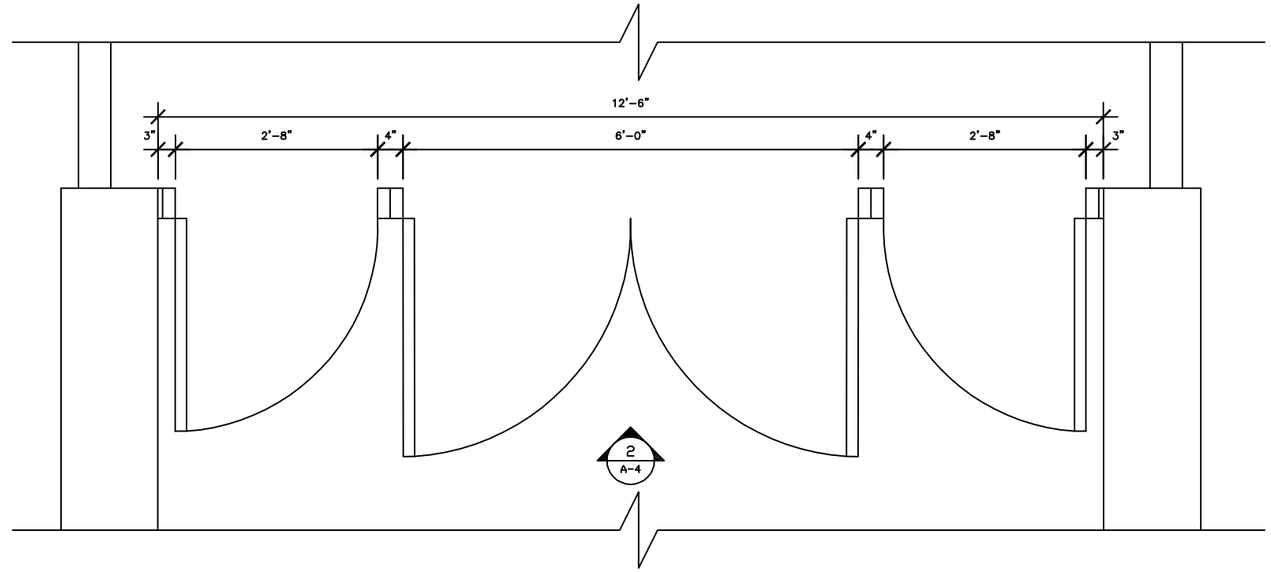

BRIDGE PLAN – NEW WORK (3)

1" = 1'-0"

ALTERED ON:	AFFIXED ON:
SIGNATURE: STAMP:	SIGNATURE: STAMP:

IT IS A VIOLATION OF LAW FOR ANY PERSON, UNLESS THEY ARE ACTING UNDER THE DIRECTION OF A LICENSED PROFESSIONAL ENGINEER, ARCHITECT, LANDSCAPE ARCHITECT, OR LAND SURVEYOR, TO ALTER AN ITEM IN ANY WAY. IF AN ITEM BEARING THE STAMP OF A LICENSED PROFESSIONAL IS ALTERED, THE ALTERING ENGINEER, ARCHITECT, LANDSCAPE ARCHITECT, OR LAND SURVEYOR SHALL STAMP THE DOCUMENT AND INCLUDE THE NOTATION "ALTERED BY" FOLLOWED BY THEIR SIGNATURE. THE DATE OF SUCH ALTERATION, AND A SPECIFIC DESCRIPTION OF THE ALTERATION.

REVISIONS

DATE	DESCRIPTION	BY	SYM.

NEW YORK STATE OF OPPORTUNITY. | Thruway Authority

TITLE OF PROJECT
TITLE OF PROJECT LINE 1
TITLE OF PROJECT LINE 2

LOCATION OF PROJECT
LOCATION OF PROJECT LINE 1
LOCATION OF PROJECT LINE 2

TITLE OF DRAWING
TITLE OF DRAWING
TITLE OF DRAWING
TITLE OF DRAWING

CONTRACT NUMBER: TA__ __-__A

DATE: XX/XX/XX

DRAWING NUMBER: A-2

TA NUMBER/DWGS/DWG NUMBER

DRAFTED BY: XXX CHECKED BY: XXX DESIGNED BY: XXX CHECKED BY: XXX BUREAU DIRECTOR: J. L. MORRIS

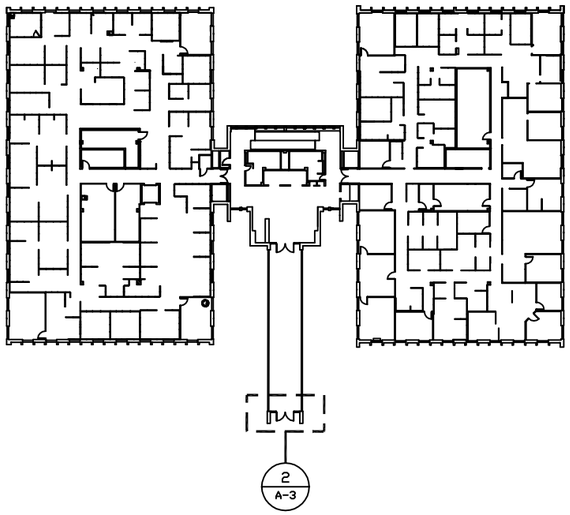

WORK LOCATION PLAN (1)

1/32" = 1'-0"

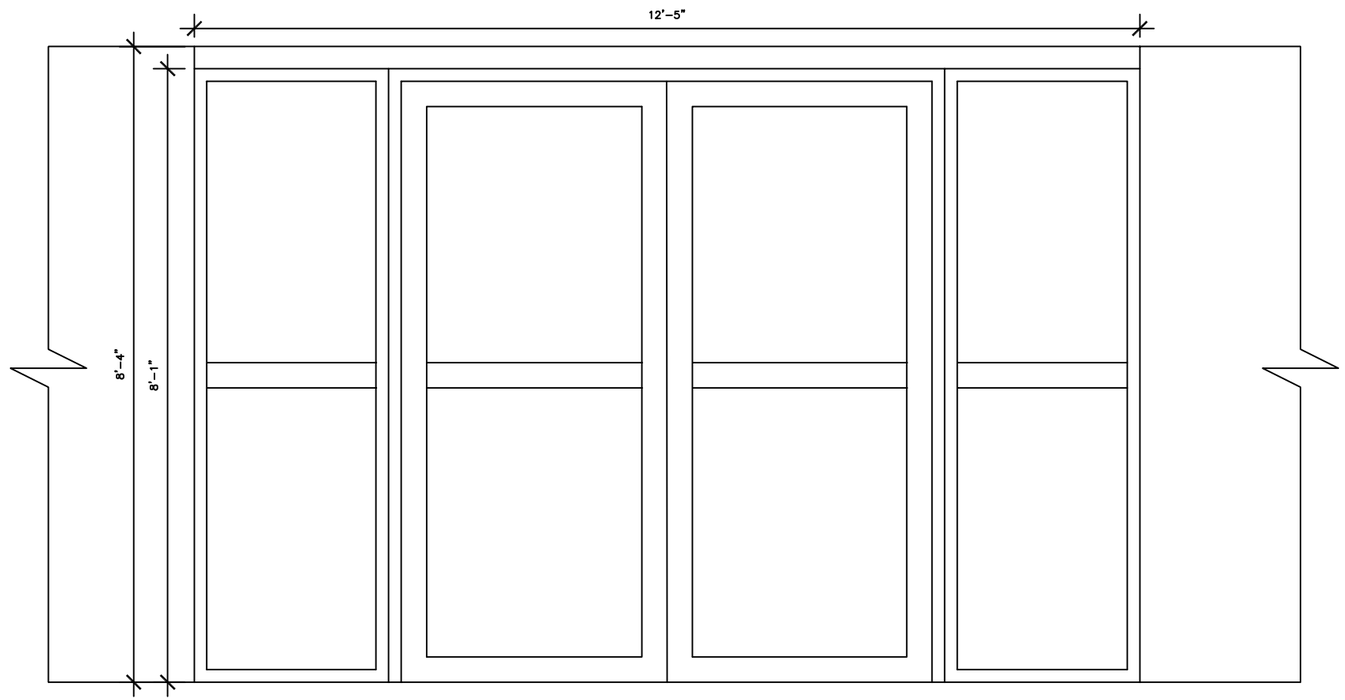

BRIDGE ELEV. – EXISTING (2)

1" = 1'-0"

NOTE
SCALE REDUCTION

THESE REDUCED PLANS MAY NOT BE EXACTLY TO SCALE. ALL INDICATED SCALES ARE REDUCED TO APPROXIMATELY HALF SIZE.

0 1 2 3 4

ALTERED ON:	AFFIXED ON:
SIGNATURE: STAMP:	SIGNATURE: STAMP:

IT IS A VIOLATION OF LAW FOR ANY PERSON, UNLESS THEY ARE ACTING UNDER THE DIRECTION OF A LICENSED PROFESSIONAL ENGINEER, ARCHITECT, LANDSCAPE ARCHITECT, OR LAND SURVEYOR, TO ALTER AN ITEM IN ANY WAY. IF AN ITEM BEARING THE STAMP OF A LICENSED PROFESSIONAL IS ALTERED, THE ALTERING ENGINEER, ARCHITECT, LANDSCAPE ARCHITECT, OR LAND SURVEYOR SHALL STAMP THE DOCUMENT AND INCLUDE THE NOTATION "ALTERED BY" FOLLOWED BY THEIR SIGNATURE. THE DATE OF SUCH ALTERATION, AND A SPECIFIC DESCRIPTION OF THE ALTERATION.

REVISIONS

DATE	DESCRIPTION	BY	SYM.

NEW YORK STATE OF OPPORTUNITY. | Thruway Authority

TITLE OF PROJECT
TITLE OF PROJECT LINE 1
TITLE OF PROJECT LINE 2

LOCATION OF PROJECT
LOCATION OF PROJECT LINE 1
LOCATION OF PROJECT LINE 2

TITLE OF DRAWING
TITLE OF DRAWING
TITLE OF DRAWING
TITLE OF DRAWING

CONTRACT NUMBER: TA__ __-__A

DATE: XX/XX/XX

DRAWING NUMBER: A-3

TA NUMBER/DWGS/DWG NUMBER

DRAFTED BY: XXX CHECKED BY: XXX

DESIGNED BY: XXX CHECKED BY: XXX

BUREAU DIRECTOR: J. L. MORRIS

XXX
XXX

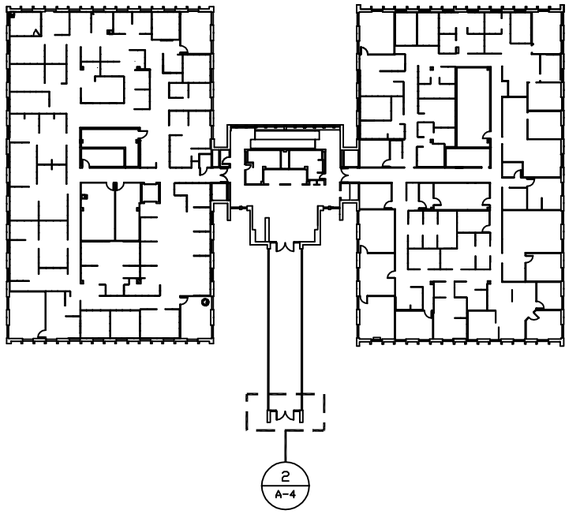

WORK LOCATION PLAN (1)

1/32" = 1'-0"

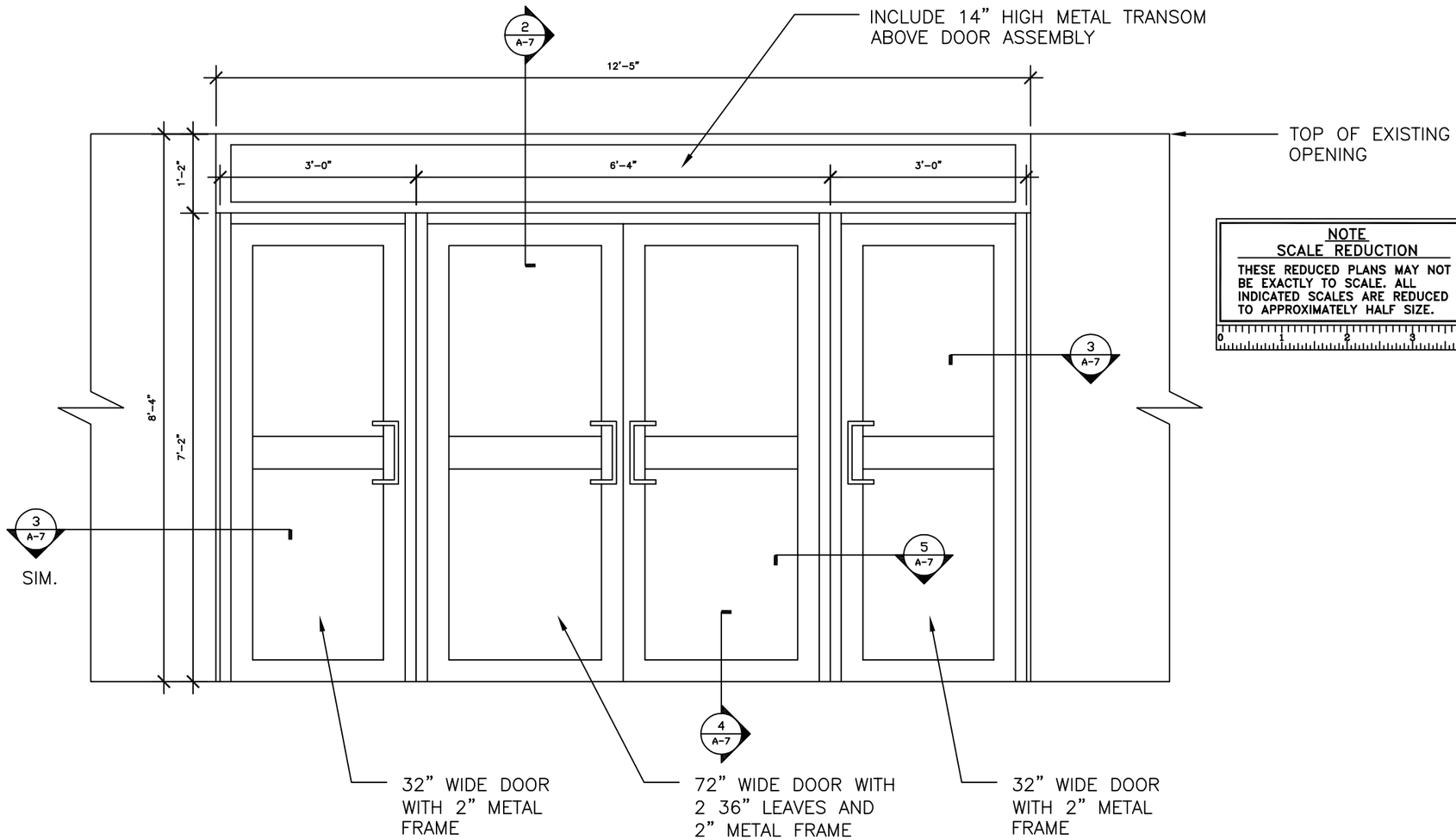

BRIDGE ELEV. – NEW WORK (2)

1" = 1'-0"

NOTE
SCALE REDUCTION

THESE REDUCED PLANS MAY NOT BE EXACTLY TO SCALE. ALL INDICATED SCALES ARE REDUCED TO APPROXIMATELY HALF SIZE.

0 1 2 3 4

ALTERED ON:	AFFIXED ON:
SIGNATURE: STAMP:	SIGNATURE: STAMP:

IT IS A VIOLATION OF LAW FOR ANY PERSON, UNLESS THEY ARE ACTING UNDER THE DIRECTION OF A LICENSED PROFESSIONAL ENGINEER, ARCHITECT, LANDSCAPE ARCHITECT, OR LAND SURVEYOR, TO ALTER AN ITEM IN ANY WAY. IF AN ITEM BEARING THE STAMP OF A LICENSED PROFESSIONAL IS ALTERED, THE ALTERING ENGINEER, ARCHITECT, LANDSCAPE ARCHITECT, OR LAND SURVEYOR SHALL STAMP THE DOCUMENT AND INCLUDE THE NOTATION "ALTERED BY" FOLLOWED BY THEIR SIGNATURE. THE DATE OF SUCH ALTERATION, AND A SPECIFIC DESCRIPTION OF THE ALTERATION.

REVISIONS

DATE	DESCRIPTION	BY	SYM.

NEW YORK STATE OF OPPORTUNITY. Thruway Authority

TITLE OF PROJECT
TITLE OF PROJECT LINE 1
TITLE OF PROJECT LINE 2

LOCATION OF PROJECT
LOCATION OF PROJECT LINE 1
LOCATION OF PROJECT LINE 2

TITLE OF DRAWING
TITLE OF DRAWING
TITLE OF DRAWING
TITLE OF DRAWING

CONTRACT NUMBER: TA__ __-__A

DATE: XX/XX/XX

DRAWING NUMBER: A-4

TA NUMBER/DWGS/DWG NUMBER

DRAFTED BY: XXX CHECKED BY: XXX

DESIGNED BY: XXX CHECKED BY: XXX

BUREAU DIRECTOR: J.L. MORRIS

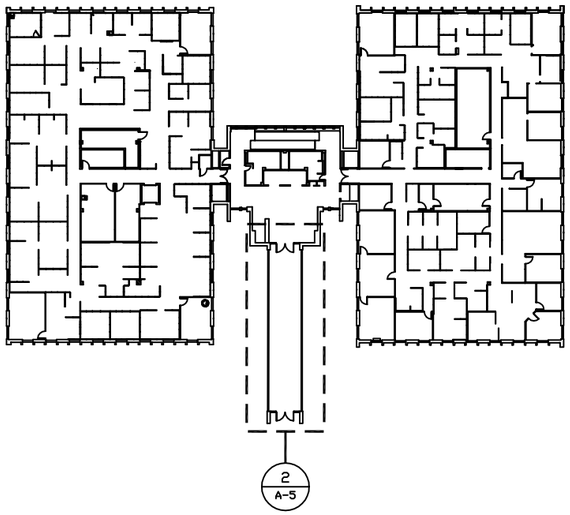

WORK LOCATION PLAN (1)

1/32" = 1'-0"

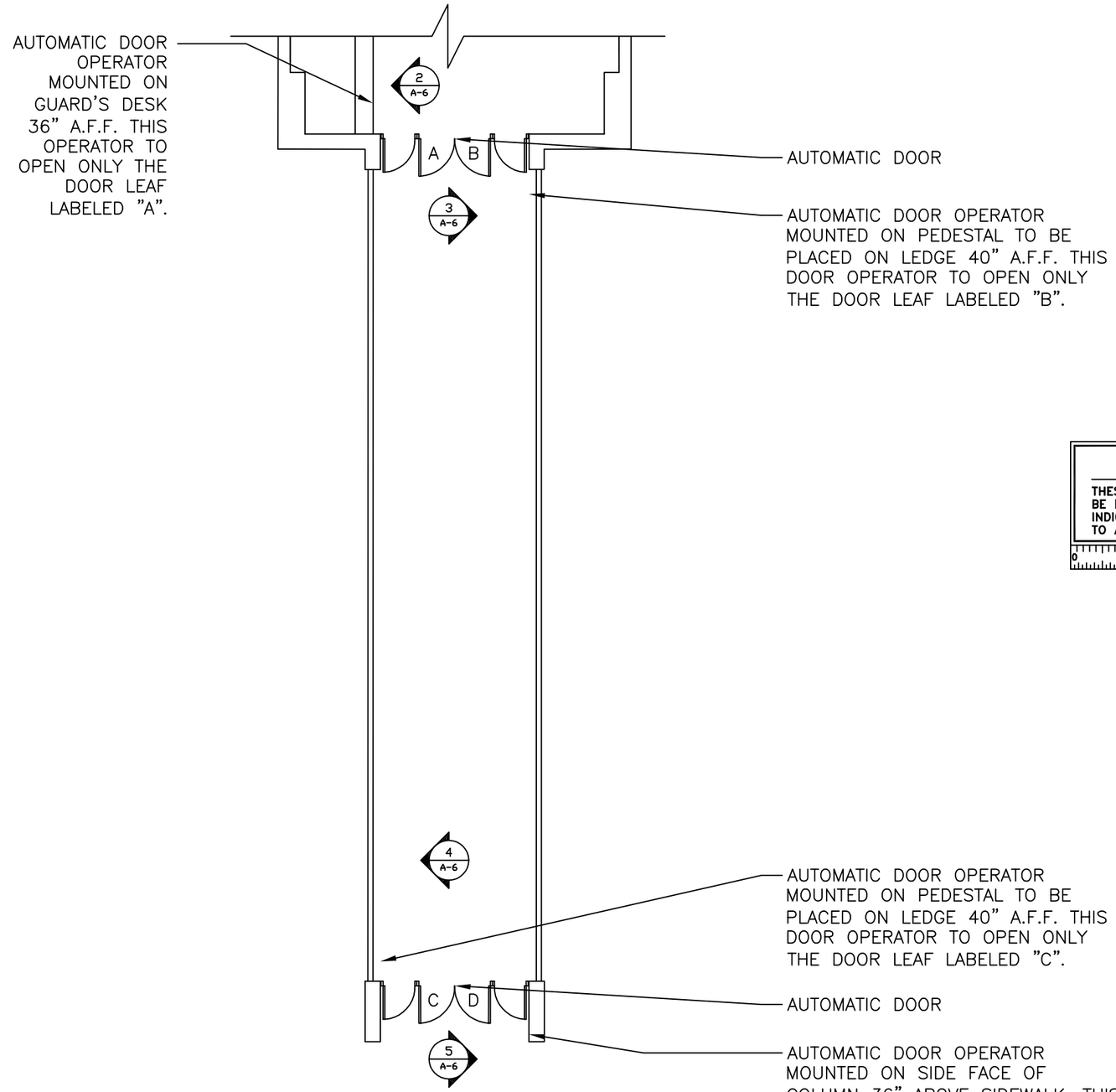

BRIDGE PLAN – NEW WORK (2)

3/16" = 1'-0"

NOTE
SCALE REDUCTION

THESE REDUCED PLANS MAY NOT BE EXACTLY TO SCALE. ALL INDICATED SCALES ARE REDUCED TO APPROXIMATELY HALF SIZE.

0 1 2 3 4

ALTERED ON:	AFFIXED ON:
SIGNATURE: STAMP:	SIGNATURE: STAMP:

IT IS A VIOLATION OF LAW FOR ANY PERSON, UNLESS THEY ARE ACTING UNDER THE DIRECTION OF A LICENSED PROFESSIONAL ENGINEER, ARCHITECT, LANDSCAPE ARCHITECT, OR LAND SURVEYOR, TO ALTER AN ITEM IN ANY WAY. IF AN ITEM BEARING THE STAMP OF A LICENSED PROFESSIONAL IS ALTERED, THE ALTERING ENGINEER, ARCHITECT, LANDSCAPE ARCHITECT, OR LAND SURVEYOR SHALL STAMP THE DOCUMENT AND INCLUDE THE NOTATION "ALTERED BY" FOLLOWED BY THEIR SIGNATURE. THE DATE OF SUCH ALTERATION, AND A SPECIFIC DESCRIPTION OF THE ALTERATION.

REVISIONS

DATE	DESCRIPTION	BY	SYM.

NEW YORK STATE OF OPPORTUNITY. Thruway Authority

TITLE OF PROJECT
TITLE OF PROJECT LINE 1
TITLE OF PROJECT LINE 2

LOCATION OF PROJECT
LOCATION OF PROJECT LINE 1
LOCATION OF PROJECT LINE 2

TITLE OF DRAWING
TITLE OF DRAWING
TITLE OF DRAWING
TITLE OF DRAWING

CONTRACT NUMBER: TA__ __-__A

DATE: XX/XX/XX

DRAWING NUMBER: A-5

TA NUMBER/DWGS/DWG NUMBER

DRAFTED BY: XXX CHECKED BY: XXX DESIGNED BY: XXX CHECKED BY: XXX BUREAU DIRECTOR: J. L. MORRIS

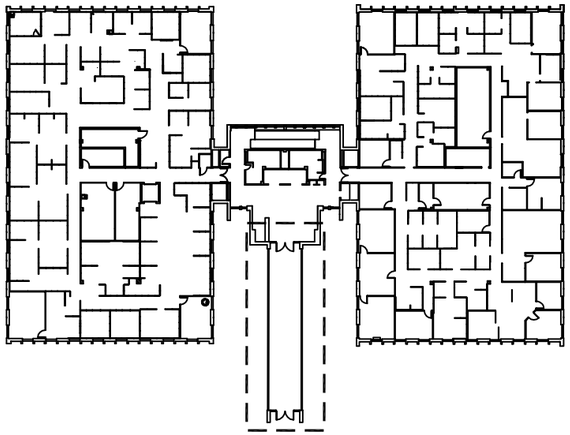

WORK LOCATION PLAN (1)
1/32" = 1'-0"

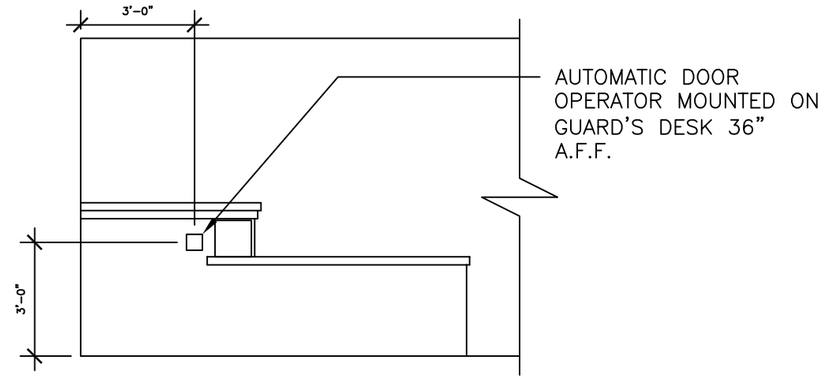

BRIDGE ELEV. – NEW WORK (2)
1/2" = 1'-0"

NOTE
SCALE REDUCTION
THESE REDUCED PLANS MAY NOT BE EXACTLY TO SCALE. ALL INDICATED SCALES ARE REDUCED TO APPROXIMATELY HALF SIZE.

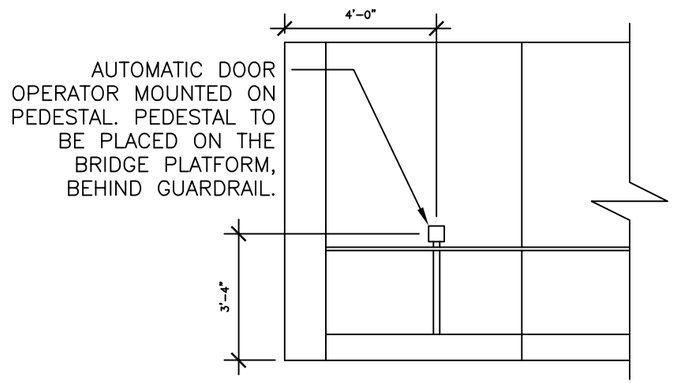

BRIDGE ELEV. – NEW WORK (3)
1/2" = 1'-0"

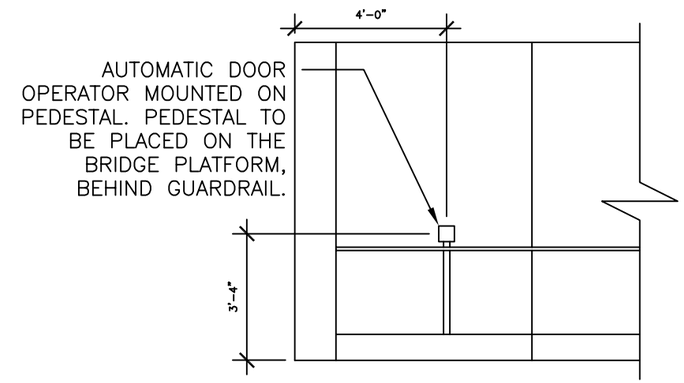

BRIDGE ELEV. – NEW WORK (4)
1/2" = 1'-0"

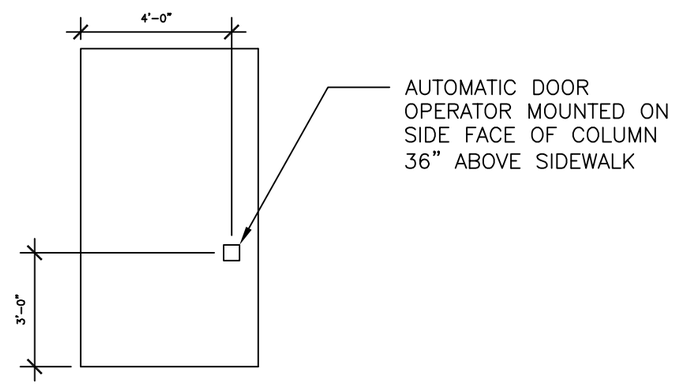

COLUMN ELEV. – NEW WORK (5)
1/2" = 1'-0"

ALTERED ON:	AFFIXED ON:
SIGNATURE: STAMP:	SIGNATURE: STAMP:

IT IS A VIOLATION OF LAW FOR ANY PERSON, UNLESS THEY ARE ACTING UNDER THE DIRECTION OF A LICENSED PROFESSIONAL ENGINEER, ARCHITECT, LANDSCAPE ARCHITECT, OR LAND SURVEYOR, TO ALTER AN ITEM IN ANY WAY. IF AN ITEM BEARING THE STAMP OF A LICENSED PROFESSIONAL IS ALTERED, THE ALTERING ENGINEER, ARCHITECT, LANDSCAPE ARCHITECT, OR LAND SURVEYOR SHALL STAMP THE DOCUMENT AND INCLUDE THE NOTATION "ALTERED BY" FOLLOWED BY THEIR SIGNATURE. THE DATE OF SUCH ALTERATION, AND A SPECIFIC DESCRIPTION OF THE ALTERATION.

REVISIONS

DATE	DESCRIPTION	BY	SYM.

NEW YORK STATE OF OPPORTUNITY. | Thruway Authority

TITLE OF PROJECT
TITLE OF PROJECT LINE 1
TITLE OF PROJECT LINE 2

LOCATION OF PROJECT
LOCATION OF PROJECT LINE 1
LOCATION OF PROJECT LINE 2

TITLE OF DRAWING
TITLE OF DRAWING
TITLE OF DRAWING
TITLE OF DRAWING

CONTRACT NUMBER: TA__ __-__A

DATE: XX/XX/XX

DRAWING NUMBER: A-6

TA NUMBER/DWGS/DWG NUMBER

DRAFTED BY: XXX
CHECKED BY: XXX
CHECKED BY: XXX
DESIGNED BY: XXX
BUREAU DIRECTOR: J. L. MORRIS

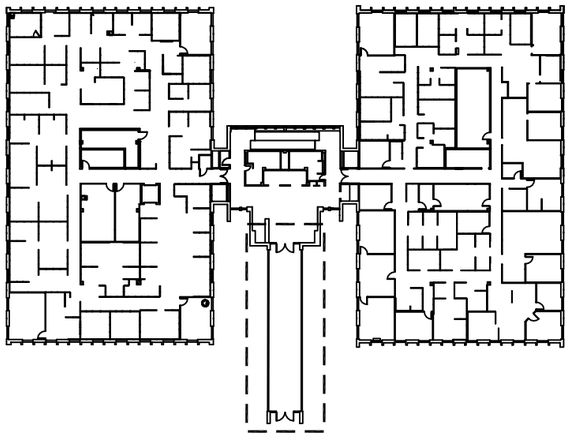

WORK LOCATION PLAN (1)
1/32" = 1'-0"

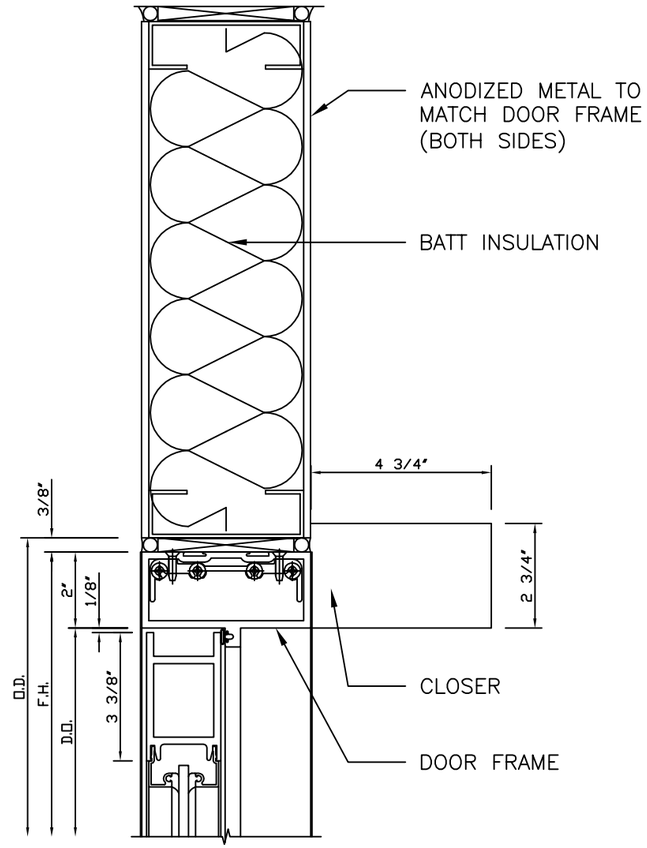

TRANSOM AND HEADER DETAIL (2)
6" = 1'-0"

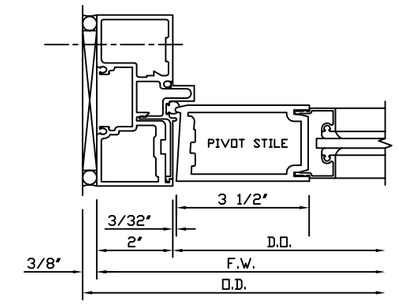

DOOR JAMB DETAIL (3)
6" = 1'-0"

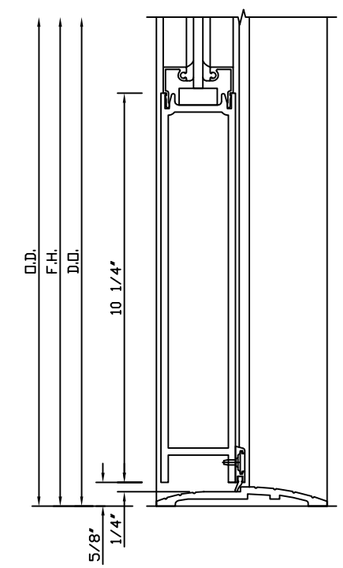

DOOR SILL DETAIL (4)
6" = 1'-0"

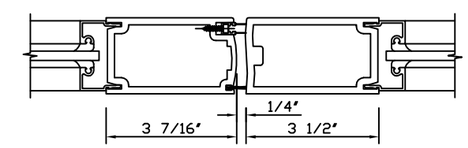

DOOR TO DOOR JAMB DETAIL (5)
6" = 1'-0"

NOTE
SCALE REDUCTION
THESE REDUCED PLANS MAY NOT BE EXACTLY TO SCALE. ALL INDICATED SCALES ARE REDUCED TO APPROXIMATELY HALF SIZE.

ALTERED ON:	AFFIXED ON:
SIGNATURE: STAMP:	SIGNATURE: STAMP:

IT IS A VIOLATION OF LAW FOR ANY PERSON, UNLESS THEY ARE ACTING UNDER THE DIRECTION OF A LICENSED PROFESSIONAL ENGINEER, ARCHITECT, LANDSCAPE ARCHITECT, OR LAND SURVEYOR, TO ALTER AN ITEM IN ANY WAY. IF AN ITEM BEARING THE STAMP OF A LICENSED PROFESSIONAL IS ALTERED, THE ALTERING ENGINEER, ARCHITECT, LANDSCAPE ARCHITECT, OR LAND SURVEYOR SHALL STAMP THE DOCUMENT AND INCLUDE THE NOTATION "ALTERED BY" FOLLOWED BY THEIR SIGNATURE. THE DATE OF SUCH ALTERATION, AND A SPECIFIC DESCRIPTION OF THE ALTERATION.

REVISIONS

DATE	DESCRIPTION	BY	SYM.

NEW YORK STATE OF OPPORTUNITY. Thruway Authority

TITLE OF PROJECT
TITLE OF PROJECT LINE 1
TITLE OF PROJECT LINE 2

LOCATION OF PROJECT
LOCATION OF PROJECT LINE 1
LOCATION OF PROJECT LINE 2

TITLE OF DRAWING
TITLE OF DRAWING
TITLE OF DRAWING
TITLE OF DRAWING

CONTRACT NUMBER: TA__ __-__A

DATE: XX/XX/XX

DRAWING NUMBER: A-7

TA NUMBER/DWGS/DWG NUMBER

DRAFTED BY: XXX
CHECKED BY: XXX
CHECKED BY: XXX
DESIGNED BY: XXX
BUREAU DIRECTOR: J. L. MORRIS

TERMS & CONDITIONS
TABLE OF CONTENTS

Description	N/A*
Part A – Contract Specific	
1. Quantity	
2. Price	
3. Price Adjustments	X
4. Contract Period	
5. Method of Award	
6. Liquidated Damages	X
7. Payment	
8. Electronic Payment	
Part B – Standard Clauses	
9. Insurances	
10. Unanticipated & Emergency Requirements	X
11. Safety	
12. Work Schedules	
13. Operation	
14. Licensing Forms	X
15. Work Permits	X
16. Labor & Wage Requirements	
17. Copyright	X
18. Technical Information	
19. Thruway Travel	
20. Toxic & Hazardous Substances	X
21. Steel Sourcing	X
22. Participation Opportunities For New York State Certified Minority/Women/Service Disabled Veteran-Owned Business Enterprises	

*** The N/A column will be checked if the information does not apply to this contract.**

TERMS & CONDITIONS
TABLE OF CONTENTS (CONT'D)

Description

Part C – General Information
23. Liability
24. Independent Contractor
25. Supplemental Agreements
26. General Specification & Appendix A
27. Bidder Responsibility
28. NYS Tax Law
29. Debriefing
30. Grievance Policy
31. Business Permits
32. NYS Finance Law 139-j and 139-k Certifications
33. Iran Divestment Certification
34. New York State Finance Law §139-l
35. New York State Human Rights Law, Article 15 of The Executive Law
36. Termination of Contract
37. Cancellation For Convenience By The Authority
38. Compliance Requirements and Procedures
39. Equal Employment Opportunity And Removal Of Institutional Policies Or Practices That Fail To Address The Harassment And Discrimination Of Individuals

GENERAL SPECIFICATION

APPENDIX A

EXHIBIT 1- Guidelines Regarding Permissible Contacts and Inappropriate Lobbying Influence

ATTACHMENT 1 – Drawing Plans for Entrance Doors at 200 Southern Blvd, Albany NY 12209

ATTACHMENT 2 - Authority Supplemental Insurance Certificate

ATTACHMENT 3 - Disclosure of Prior Non-Responsibility Determinations (139J&K)

ATTACHMENT 4 - Certificate of Compliance

ATTACHMENT 5 - Conducting Business in Russia Certificate

ATTACHMENT 1 – Drawing Plans for Entrance Doors at 200 Southern Blvd, Albany NY 12209

TERMS & CONDITIONS

PART A

1. QUANTITY

The quantities listed in this IFB are as stated.

2. PRICE

Price shall be net FOB delivered destination, freight prepaid and include removal, furnish & installation. Price shall be all inclusive of labor & materials, taxes, and ancillary charges.

Discount as stated by the bidder in the BID will not be taken unless payment is made within 30 days.

3. PRICE ADJUSTMENTS

Not applicable.

4. CONTRACT PERIOD

Prompt delivery and installation.

5. METHOD OF AWARD

The award will be made by Total Bid to the lowest responsive and responsible bidder. To be considered for an award, the bidder must submit complete pricing for all Items, including any sub-Items therein.

A discount for payment in 30 days will not be considered in determining the low bidder but will be considered in deciding tie bids. A discount of less than 1% will not be considered.

6. LIQUIDATED DAMAGES

Not applicable.

7. PAYMENT

Payment will be made upon submittal by the Contractor of a properly executed voucher or a vendor invoice with one copy, provided all terms of the contract have been fulfilled to the requirements of the purchase order. All payment documents must include your Federal Tax Identification Number.

If, for any reason, a question of non-performance arises at any time during the contract period, payment in whole or in part may be withheld, against which to charge back any adjustment required.

8. ELECTRONIC PAYMENT

Contractor understands and agrees that payments for invoices submitted will only be rendered electronically unless payment by paper check is expressly authorized by the Authority, in its sole discretion, due to extenuating circumstances. Contractor shall comply with the Authority's procedures to authorize electronic payments. Authorization forms are available at the Authority's website at http://www.thruway.ny.gov/business/purchasing/epayments/index.html, by email at suppliermgmt@thruway.ny.gov, or by telephone at (518) 436-2859. Contractor acknowledges that it will not receive payment on any invoices submitted under this Contract if it does not comply with the Authority's

electronic payment procedures, except where the Authority has expressly authorized payment by paper check as set forth above.

PART B

9. INSURANCE

A. The Contractor must procure prior to commencement of work under the Contract, and maintain until the Contract is completed and the Authority has accepted all work performed thereunder, insurance of the kinds and in the amounts specified herein, covering all services and operations under the Contract, whether performed by the Contractor or its subcontractors, in accordance with the following conditions:

1) All insurance required by the Contract shall be obtained at the sole cost and expense of the Contractor.

2) All insurance required by the Contract shall be maintained with insurance carriers licensed to do business in New York State, and acceptable to the Authority, with an A.M. Best rating of "A-" or better. The Authority may, at its sole discretion, accept policies of insurance written by a non-authorized carrier or carriers when certificates and/or other policy documentation are accompanied by a completed Excess Lines Association of New York (ELANY) Affidavit. Notwithstanding the foregoing, nothing herein shall be construed to require the Authority to accept insurance placed with a non-authorized carrier under any circumstances.

3) All insurance required by the Contract shall be primary to any Authority insurance policy or Authority self-insurance program, which shall be excess and non-contributory.

4) The Contractor shall require that any approved subcontractors carry insurance with the same limits and provisions set forth herein.

5) The Contractor shall furnish the Authority with Certificate(s) of Insurance on ACORD Form 25, accompanied by the Authority Supplemental Insurance Certificate (ATTACHMENT 1 – TA-W51343 (2017/11), for each insurance carrier involved. Such Certificate(s) shall be executed by a duly authorized representative of the insurance carrier, certifying such authorization and showing compliance with the Authority's insurance requirements set forth herein. The Contractor shall furnish the Authority with a copy of each Endorsement required herein. For work to be performed within New York State, proof of Workers' Compensation and Disability Benefits Insurance shall be indicated on the appropriate Workers' Compensation Board form; generally, C-105.2 for Workers Compensation and DB-120.1 for NYS Disability Benefits.

6) All policies, by specific Endorsement, shall provide for written notice to the Authority no less than thirty (30) days prior to the cancellation, nonrenewal, or material alteration of any insurance policies referred to therein. Any such notice shall be sent by certified mail to the contact listed for this Invitation for Bid.

7) If insurance policies utilized for Authority projects contain Deductibles or Self-Insured Retentions (SIRs), they must be declared as such with applicable levels on the Certificate(s) of Insurance and the Authority Supplemental Insurance Certificate. Insurance policies with Deductibles in excess of $100,000 will require review and approval by the Authority. Additional security or other requirements may be imposed at the sole discretion of the Authority.

8) Insurance policies with Self-Insured Retentions (SIRS) must receive prior approval by the Authority. All applications for SIR approval must be submitted to the Authority's Office of Investments and Asset Management, indicate whether the program is administered by a third party and contain a complete description of the program. SIR programs in excess of $100,000 must be administered by a third party

administrator and must also meet additional security requirements. The Authority at its sole discretion reserves the right to require the Contractor to provide additional collateral or to reject the use of an SIR by the Contractor. The Contractor will be solely responsible for all claims, expenses and loss payments within the retention limit.

9) The Contractor shall provide certified copies of all declarations pages or of the insurance policies themselves, upon request by the Authority, within twenty (20) days of such request.

10) Failure of the Authority to demand such certificates, policies, endorsements, or other evidence of full compliance with the Authority's insurance requirements, or failure of the Authority to identify a deficiency from evidence that is provided, shall not constitute or be construed as a waiver of the Contractor's obligation to maintain such insurance.

11) Failure to maintain the required insurance, and failure to provide proof of such coverage to the Authority at its request, may, in the Authority's sole discretion, result in termination of the Contract, or in delay or stoppage of payments.

12) At least two weeks prior to the expiration of any policy required by this Agreement, evidence of renewal or replacement policies of insurance with terms at least as favorable to the Authority as the required minimum amounts set forth herein. must be furnished to the Authority.

13) By requiring insurance, the Authority does not represent that certain coverages and limits will necessarily be adequate to protect the Contractor, and such coverages and limits shall not be deemed a limitation on the Contractor's liability under the indemnities granted to the Authority under any provision of the Contract.

14) The Contractor and its subcontractors shall waive all rights against the State of New York, the Authority, and their respective agents, officers, directors and employees, for recovery of damages to the extent these damages are covered by the CGL policy, [and] Business Auto Policy, [and Umbrella policy, as required].

15) The Contractor shall provide a copy of the Authority's Insurance Requirements to its insurance producer(s) and insurance carrier(s).

B. The specific types and amounts of insurance that the Contractor must provide pursuant to the Contract are as follows:

1) <u>Workers' Compensation & NYS Disability Benefits Insurance</u> –
The Contract shall be void and of no force and effect unless the Contractor shall provide and maintain coverage during the life of the Contract for the benefit of such employees as are required to be covered by the Workers' Compensation/Disability Benefits Law. If the Contract involves work on or near a shoreline, a U.S. Longshore and Harborworkers' Compensation Act Endorsement must be provided. The Maritime Coverage Endorsement, on an "if any" basis, shall be attached to the policy. The Contractor must provide proof of exemption, certified by the Workers' Compensation Board, to obtain a waiver from the requirements of this provision.

Evidence of Workers' Compensation coverage must be provided on one of the following forms specified by the Commissioner of the Workers' Compensation Board:

1. C-105.2 – Certificate of Workers' Compensation Insurance;

2. U-26.3 – Certificate of Workers' Compensation Insurance from the State Insurance Fund; or

3. GSI-105/SI-12 – Certificate of Workers' Compensation Self Insurance.

4. CE-200 – Certificate of Attestation of Exemption

Evidence of Disability Benefits coverage must be provided on one of the following forms specified by the Commissioner of the Workers' Compensation Board:

1. DB-120.1 – Certificate of Insurance Coverage under the NYS Disability Benefits Law;
2. DB-155 – Certificate of Disability Self Insurance; or
3. CE-200 – Certificate of Attestation of Exemption.

Disability benefits coverage must also include a rider providing Paid Family Leave insurance in form and substance satisfactory to the Authority. Evidence of coverage shall be provided to the Authority, and may be in the form of a Notice of Compliance provided by your insurance carrier stating that you have Paid Family Leave insurance. The Notice will include information about your carrier. If you are self-insured, you can get this notice by contacting the NYS Workers' Compensation Board at certificates@wcb.ny.gov.

2) Commercial General Liability Insurance - The Contractor shall maintain Commercial General Liability (CGL), with no less than the following limits and coverages:

Each Occurrence Limit:	$1,000,000
General Aggregate:	$2,000,000
Products/Completed Operations Aggregate:	$2,000,000
Fire Damage Legal Liability:	$ 100,000
Medical Expense:	$ 5,000

CGL Insurance shall cover liability arising from premises, operations, independent contractors, products/completed operations, personal injury, advertising injury and contractual liability.

The General Aggregate shall apply separately to the subject matter (Project) of the Contract, and the Contractor shall provide an appropriate Project Endorsement, using ISO Form CG 25 03 11 85 or its equivalent, to the Authority for this purpose.

3) Business Auto Liability Insurance - The Contractor shall maintain Business Automobile coverage, with no less than a $1,000,000 Combined Single Limit, which shall cover liability arising out of the Contractor's use of any motor vehicle, whether owned, leased, hired, or non-owned.

If the Contract involves the removal of hazardous waste or environmental exposures, pollution liability coverage equivalent to that provided under the ISO Broadened Pollution Liability Coverage for Covered Autos endorsement (CA 9948) shall be provided, and the Motor Carrier Act endorsement (MCS 90) shall be attached.

10. UNANTICIPATED & EMERGENCY REQUIREMENTS

Not Applicable.

11. SAFETY

Equipment, materials and any work performed shall meet all applicable safety regulations, codes and laws including OSHA, EPA, Coast Guard and Underwriter's Laboratories guidelines.

12. WORK SCHEDULES

The Contractor shall coordinate with the site supervisor 48 hours before the intended start of work.

Installation must be done on off work hours. Contractor shall arrange the work schedule so that once the work begins it shall continue without interruption or delay each workday until the job is completely finished and accepted by the Authority. This work must be done on weekends during the day. Work can began as early as 6am & continue until the building is secured. Contractor must coordinate work with Site Supervisor minimum 48 hours prior to start of work. Thruway site Supervisor or designee will be present while work is performed.

13. OPERATION

a. Temporary Water

Water may be taken from existing water connections. Extreme care must be taken in its use and all precautions for shutting off water shall be observed.

b. Temporary Light and Power

Electricity for light and power is available from existing sources in the area. Contractor shall furnish any wiring, outlets, connectors, etc., as required for this work. All temporary electrical work shall comply with requirements of any local and state authorities having jurisdiction as well as the National Electrical Code. Temporary electric wiring shall not interfere with operations of the Authority and all such wiring shall be removed from the premises at the completion of the contract.

c. Temporary Sanitary Conveniences

Construction employees may use the sanitary facilities at the existing building. The Contractor shall cooperate in keeping these facilities clean at all times and shall prevent the tracking of construction materials and debris into the area.

d. First Aid

The Contractor shall provide equipment and materials as necessary for first aid service to any who may be injured during work on this project. The Contractor shall have standing arrangements for the expeditious removal and hospital treatment of any employee who may be injured or may become ill.

e. Pollution Control

Disposal of volatile fluid wastes (such as mineral spirits, oil or paint thinner) in storm or sanitary sewer systems or into streams or waterways is not permitted.

f. Removal of Debris

Burning or burying of waste material at the job site is strictly prohibited.

g. Protection of Work Site Surroundings

The Contractor shall provide suitable protection for all personnel and property at the work site.

14. LICENSING FORMS

Not applicable.

15. WORK PERMITS

Not applicable.

16. LABOR & WAGE REQUIRMENTS

a. Article 8 – Construction/Reconstruction Work Contracts

The contract shall be executed to the provisions of Workers' Compensation Law and Article 8 of the New York State Labor Law.

The "Prevailing Rate Schedule" referred to therein is hereby incorporated and made a part of this specification. For Prevailing Wage Schedule, use the following link:

https://apps.labor.ny.gov/wpp/publicViewProject.do?method=showIt&id=1539136

For Prevailing Wage Updates, use the following link:

Links to schedule updates appear in the table at the bottom of the web page.

The applicable Prevailing Rate Chart is PRC# 2022011261 - Entrance doors

Effective November 9, 1997, the Labor Law requires any Contractor employing laborers on a public works project for the Authority to submit payroll records to the Authority. A transcript of the original payroll record is required within 30 days of issuance and every 30 days thereafter as arranged with the purchasing officer.

For a copy of the Prevailing Wage Schedule, please contact the person listed on the front of this IFB.

17. COPYRIGHT

Not applicable.

18. TECHNICAL INFORMATION

The Authority maintains repair and overhaul facilities with replacement parts stocked to service the equipment it owns and operates. Therefore, all procurements under this contract shall include the same technical documentation as is available to the manufacturer's dealers and repair centers. Such information shall include, but not be limited to, the following:

- Operating instructions complete
- Routine maintenance instructions complete
- Shop repair manual(s)
- Complete parts list(s)
- Recommended spare parts list
- Manufacturers service bulletins

- Schematic drawings

19. THRUWAY TRAVEL

Toll-free use of the Thruway will not be granted. The bid must include all costs of travel to the job site for performance of this contract, if applicable.

20. TOXIC & HAZARDOUS SUBSTANCES

Not applicable.

21. STEEL SOURCING

Not applicable.

22. PARTICIPATION OPPORTUNITIES FOR NEW YORK STATE CERTIFIED MINORITY/WOMEN/SERVICE DISABLED VETERAN-OWNED BUSINESS ENTERPRISES

In accordance with Article 15-A and 17-B of the New York State Executive Law, the Thruway Authority is committed to providing meaningful participation in public procurement by certified Minority and/or Women-Owned Business Enterprises ("MWBEs") and certified Service-Disabled Veteran-Owned Business Enterprises ("SDVOBs"), thereby further integrating such businesses into New York State's economy.
The Authority recognizes the need to promote participation and inclusion of Minority and/or Women-Owned Business Enterprises and Service-Disabled Veteran-Owned Business Enterprises and to ensure that certified MWBEs and SDVOBs have opportunities for maximum feasible participation in the performance of Authority contracts.
In recognition of the service and sacrifices made by service-disabled veterans and in recognition of their economic activity in doing business in New York State, Bidders/Contractors are strongly encouraged and expected to consider certified SDVOBs in the fulfillment of the requirements of the contract. Such participation may be as subcontractors or suppliers, as protégés, or in other partnering or supporting roles.
For the purposes of this procurement, the Authority has determined that this solicitation does not meet the requirements for the establishment of participation goals or provide for MWBE and SDVOB subcontracting opportunities for participation as subcontractors, service providers, and suppliers to Contractor.
Nevertheless, MWBEs and SDVOBs are strongly encouraged to submit bids for this procurement. The successful Bidder/Contractor is encouraged to make every good faith effort to promote and assist in facilitating the participation of Minority/Women-Owned and Service-Disabled Veteran-Owned Business Enterprises on the contract for the provision of services and materials by searching the respective websites or visiting:
The directory of New York State Certified MWBEs at: https://ny.newnycontracts.com
The directory of New York State Certified SDVOBs at: https://ogs.ny.gov/veterans/

Bidders/Contractors are encouraged to contact the Authority's Office of Compliance at (518) 471-5830.

PART C

23. LIABILITY

The Contractor shall be responsible for all damage to life and property due to negligent or otherwise tortious acts, errors or omissions of the Contractor in connection with its services under the Contract. Further, it is expressly understood that the Contractor shall indemnify and save harmless the Authority and/or the State of New York, as their interests may appear, from claims, suits, actions, damages and costs of every name and description resulting from the negligent performance of the services of the Contractor or the quality of goods provided under the Contract, and such indemnity shall not be limited by reason of enumeration of any insurance coverage herein provided. However, the Contractor shall not be required to indemnify the Authority for that

portion of any claim, suit, action, damage or cost which arises due to the negligent act or omission of the Authority and shall not be required to indemnify the State of New York for that portion of any claim, suit, action, damage or cost which arises due to the negligent act or omission of the State. The provisions of this section shall survive the expiration or termination of the Contract.

24. INDEPENDENT CONTRACTOR

The Contractor is and shall be, in all respects, an independent contractor in performing services pursuant to the Contract. In accordance with its status as an independent contractor, the Contractor shall covenant and agree that neither it nor its agents and/or employees will hold itself or themselves out as or claim to be an officer or employee of the Authority, and that neither the Contractor nor its agents and employees shall make any claim, demand or application to or for any right or privilege applicable to an officer or employee of the Authority, including, but not limited to Workers' Compensation coverage, Unemployment Insurance benefits, Social Security coverage or Retirement System membership or credit.

25. SUPPLEMENTAL AGREEMENTS

Other agencies, authorities or entities of New York State government may use this contract by entering into a supplemental agreement with the Contractor at his/her option.

The supplemental agreement shall not alter, delete or in any other manner change the terms and conditions of this contract and must have the express written consent of the Director of Purchasing of the Authority.

26. GENERAL SPECIFICATION & APPENDIX A

The General Specification and Appendix A are attached and apply to all Thruway Authority contracts.

27. BIDDER RESPONSIBILITY

Authority policy provides for the award of contract to the lowest responsible and reliable bidder as will best promote the Authority's interest. The Authority may examine the conduct of potential Contractors and Subcontractors with respect to their past performance, financial standing, labor practices, ownership and affiliation and their compliance with relevant state and federal regulations. The Authority will give due consideration in the making of an award to any evidence or reliable information that the past or current record indicates, in the opinion of the Authority, a lack of responsibility of the bidder or proposed Subcontractor.

Vendor Responsibility Questionnaire

All contracts valued at $100,000 or more require the bidder to complete the "NYS Vendor Responsibility Questionnaire". However, the Authority may require any bidder to complete the Questionnaire upon request.

Vendors are invited to file the required Vendor Responsibility Questionnaire online via the New York State VendRep System or may choose to complete and submit a paper questionnaire. To enroll in and use the New York State VendRep System, see the VendRep System Instructions available at http://www.osc.state.ny.us/vendrep/enroll.htm or go directly to the VendRep System online at https://portal.osc.state.ny.us. For direct VendRep System user assistance, the Office of the State Comptroller's Help Desk may be reached at 866-370-4672 or 518-408-4672, or by email at ciohelpdesk@osc.state.ny.us.

Vendors must provide their New York State Vendor Identification Number when enrolling. To request assignment of a Vendor ID or for VendRep System assistance, contact the Office of the State Comptroller's IT Service Desk at 866-370-4672 or 518-408-4672 or by email at ITServiceDesk@osc.state.ny.us. Vendors opting to file a paper questionnaire can obtain it from the VendRep website http://www.osc.state.ny.us/vendrep/forms_vendor.htm or the Office of the State Comptroller's Help Desk.

If required, prior to making an award the Authority will send an email to the apparent low bidder(s) with instructions to complete a Vendor Responsibility Questionnaire. The email will also instruct the vendor to advise the Authority within five (5) business days from receipt of their intention to either file online or submit a paper copy.

28. NYS TAX LAW

Pursuant to Section 5-a of the NYS Tax Law a contractor must file form ST-220-CA "Contractor Certification to Covered Agency" with the Authority and form ST-220-TD with the Tax Department before a contract with a value exceeding of $100,000 may take effect. For detailed information regarding this law or to view these forms visit the Tax web site at http://tax.ny.gov or contact the Tax Department at 1-800-698-2931 for additional clarification.

Prior to making an award, the Authority will send form ST-220-CA to the apparent low bidder(s) to complete and return within five (5) business days from receipt.

29. DEBRIEFING

Debriefings provide an opportunity for a bidder to discuss with the Authority the reasons why a bid was not selected for a contract award. All bidders will be sent a Notice of Contract Award (Tentative) which indicates the intended awardee(s).

A request for a debriefing must be made within 15 calendar days from the date of the Notice of Contract Award (Tentative). The debriefing must be limited to review of that bidder's offering. To request a debriefing, notify the designated contact.

30. GRIEVANCE POLICY

Any question or grievance regarding the Authority's procurement practices should first be addressed to the Director of Purchasing. Your concerns will be given careful consideration with every effort made to resolve the matter. A copy of the Authority's "Vendor Protest" procedure (TAP-523) can be obtained online at http://www.thruway.ny.gov/business/purchasing/vendor-protest.html or by contacting the Director of Purchasing at P.O. Box 189, Albany, New York 12201 0189, Attn: Vendor Protest.

There are TWO distinct phases regarding the vendor protest procedure:

Solicitation Phase Protest

A prospective bidder may, during the procurement solicitation phase, protest the content of an Invitation for Bid (IFB) or any aspect of the Authority's conduct of the solicitation phase of a procurement. Such protests must be submitted in writing to the Authority's Director of Purchasing, via certified mail or overnight mail service, and must be received by the Authority no later than 1:00 p.m. on the business day prior to the date when proposals or bids are due.

Post Award Protest

An actual bidder that has submitted a bid or proposal in response to a solicitation may protest the award of the contract for that solicitation. Such protest must be submitted in writing to the Authority's Director of Purchasing, via certified mail or overnight mail service, and must be received by the Authority no later than 1:00 p.m. on the 15th business day following the Authority issuance of a Tentative Notice of Contract Award.

Protests are to be addressed as follows:

Director of Purchasing
NYS Thruway Authority
200 Southern Boulevard
Albany, NY 12209-2098
Attn: Vendor Protest

31. BUSINESS PERMITS

The NYS Governor's Office of Regulatory Reform serves as a permit assistance resource for information on state permits and licenses. For information about state permits and licenses needed for any business venture, you may call 1-800-342-3464 or 518-474-8275 or visit their web site at www.nys-permits.org.

32. NYS FINANCE LAW 139-J AND 139-K CERTIFICATIONS

By submission of this bid, the bidder certifies that all information bidder has provided to the Authority with respect to State Finance Law 139-j and 139-k is complete, true and accurate.

Certificate of Compliance with the Authority Guidelines Regarding Permissible Contacts During A Procurement And The Prohibition Of Inappropriate Lobbying Influence (form TA-W2111 [04/2019]) - NYS Finance Law 139-j requires that bidders certify that they have read, understand and agree to comply with the Authority policy Regarding Permissible Contacts During A Procurement And The Prohibition Of Inappropriate Lobbying Influence.

NYS Finance Law 139-j and 139-k Disclosure of Prior Non-Responsibility Determinations (form TA-W3053 [04/2019]). NYS Finance Law 139-k requires that bidders disclose findings of non-responsibility made within the previous four years by any governmental entity where such prior finding of non-responsibility was due to a violation of NYS Finance Law 139-j or the intentional provision of false or incomplete information to a governmental entity.

33. IRAN DIVESTMENT CERTIFICATION

By submission of this bid, each person and each person signing on behalf of any other party certifies, and in the case of a joint bid or partnership each party thereto certifies as to its own organization, under penalty of perjury, that to the best of its knowledge and belief, that each person is not on the list created pursuant to paragraph (b) of subdivision 3 of Section 165-a of the State Finance Law.

34. NEW YORK STATE FINANCE LAW §139-l

By submission of this bid proposal, each bidder and each person signing on behalf of any bidder certifies, and in the case of a joint bid each party thereto certifies as to its own organization, under penalty of perjury, that the bidder has and has implemented a written policy addressing sexual harassment prevention in the workplace and provides annual sexual harassment prevention training to all of its employees. Such policy shall, at a minimum, meet the requirements of section two hundred one-g of the labor law.

35. NEW YORK STATE HUMAN RIGHTS LAW, ARTICLE 15 OF THE EXECUTIVE LAW

The New York State Human Rights Law, Article 15 of the Executive Law, prohibits discrimination and harassment based on age, race, creed, color, national origin, sex, pregnancy or pregnancy-related conditions, sexual orientation, gender identity, disability, marital status, familial status, domestic violence victim status, prior arrest or conviction record, military status or predisposing genetic characteristics.

The Human rights Law may also require reasonable accommodation for persons with disabilities and pregnancy-related conditions. A reasonable accommodation is an adjustment to a job or work environment that enables a person with a disability to perform the essential functions of a job in a reasonable manner. The Human Rights Law may also require reasonable accommodation in employment on the basis of Sabbath observance or religious practices.

Generally, the Human Rights Law applies to:

- all employers of four or more people, employment agencies, labor organizations and apprenticeship training programs in all instances of discrimination or harassment;
- employers with fewer than four employees in all cases involving sexual harassment; and,
- any employer of domestic workers in cases involving sexual harassment or harassment based on gender, race, religion or national origin.

In accordance with Executive Order No. 177, by submission of this bid proposal, the bidder hereby certifies that it does not have institutional policies or practices that fail to address the harassment and discrimination of individuals on the basis of their age, race, creed, color, national origin, sex, sexual orientation, gender identity, disability, marital status, military status, or other protected status under the Human Rights Law.

Executive Order No. 177 and the aforementioned certification do not affect institutional policies or practices that are protected by existing law, including but not limited to the First Amendment of the United States Constitution, Article 1, Section 3 of the New York State Constitution, and Section 296(11) of the New York State Human Rights Law.

36. TERMINATION OF CONTRACT

The Authority has a right to terminate the contract in the event the Authority finds the certifications made by the bidder in accordance with NYS Finance Law 139-j and 139-k were intentionally false or intentionally incomplete. This also includes the Authority's right to terminate the contract at any time in the event the bidder is non-responsible or has failed to accurately disclose vendor responsibility information.

37. CANCELLATION FOR CONVENIENCE BY THE AUTHORITY

The Authority retains the right to cancel contract, in whole or in part without reason provided that the Contractor is given at least sixty (60) days notice of its intent to cancel. This provision should not be understood as waiving the Authority's right to terminate the contract for cause or stop work immediately for unsatisfactory work, but is supplementary to that provision. Any such cancellation shall have no effect on existing Authority agreements, which are subject to the same 60-day discretionary cancellation or cancellation for cause.

38. COMPLIANCE REQUIREMENTS AND PROCEDURES

It is the policy of the New York State Thruway Authority ("Authority") to comply with the provisions of Article 15-A of the New York State Executive Law, which requires that every contract over $25,000 will afford equality of economic opportunities for minority group members and women, the facilitation of participation by Minority and/or Women-Owned Business Enterprises ("MWBEs"). The Authority shall establish separate goals for participation of MWBEs on all Authority contracts where applicable.

Article 17-B of the New York State Executive Law provides for more meaningful participation in public procurement by certified Service-Disabled Veteran-Owned Business Enterprises ("SDVOBs"); thereby further integrating such businesses into New York State's economy. The Authority recognizes the need to promote the employment of service-disabled veterans and to ensure that certified SDVOBs have opportunities for maximum feasible participation in the performance of Authority contracts.

The Authority is further, committed to providing equal training and employment opportunities to minorities and women to participate in the Authority's contracting and procurement processes, and by ensuring nondiscrimination in accordance with Appendix A-Standard Clauses for New York State Thruway Authority Contracts including Clause 4 – Non-Discrimination Requirements, Clause 11 - Equal Employment Opportunities for Minorities and Women, Executive Order 11246, Executive Order 177, Training Special Provisions and/or all applicable, federal, State, laws, rules, regulations and Executive Orders

General Provisions

a. The Bidder/Contractor and/or all subcontractors, shall comply with the applicable laws, rules, regulations and provisions governed by the contract, in addition to any nondiscrimination or diversity practices and provision of the contract at no additional cost to Authority.

b. These provisions and requirements shall be included in all subcontracting contracts so that these requirements and provisions shall be binding upon all subcontractors, performing work under this contract.

c. The Contractor/Consultant represents and warrants that, as a condition for award of the Contract, the Contractor/Consultant has submitted a Statewide Utilization Management Plan ("SUMP") via the NYS Contract System (NYSCS) if required by Authority, which lists all proposed Subcontractors/ subconsultants including an identification of the NYS certified DBE/MWBE/SDVOB subcontractors/subconsultants/ suppliers the Contractor/Consultant intends to use to perform the Work of the Contract and to achieve the DBE/MWBE/SDVOB Contract Goals established in the Contract Documents. In addition, or alternatively, Contractor/Consultant may have submitted a request for a waiver. Prior to award of the Contract, the Authority approved Contractor's/Consultant's plan to achieve the DBE/MWBE/SDVOB Contract Goals established in the Contract Documents (DBE/MWBE/SDVOB Utilization Plan) to the extent the Authority did not approve Contractor's/Consultant's request for a waiver of part or all of the DBE/MWBE/SDVOB Contract Goals. The Authority approval of the DBE/MWBE/SDVOB Utilization Plan approves a Subcontractor/Subconsultant only for the purpose of the DBE/MWBE/SDVOB Utilization Plan.

39. EQUAL EMPLOYMENT OPPORTUNITY AND REMOVAL OF INSTITUTIONAL POLICIES OR PRACTICES THAT FAIL TO ADDRESS THE HARASSMENT AND DISCRIMINATION OF INDIVIDUALS

Bidder/Contractor agrees to comply with all Compliance Requirements and Procedures, in accordance with the terms and conditions of Appendix A – Standard Clauses for New York State Thruway Authority Contracts including Clause 4 – Non-Discrimination Requirements and Clause 11 - Equal Employment Opportunities for Minorities and Women.

Equal Employment Opportunities for minority group members and women ("EEO") and related provisions shall be deemed supplementary to, and not in lieu of, the nondiscrimination provisions required by New York State Executive Law Article 15 (the "Human Rights Law") and other applicable federal, state, and local laws.

In the performance of this procurement/contract, Bidder/Contractor shall demonstrate compliance which the Work Force Diversity Requirements and Procedures Regarding Equal Employment Opportunities for Minority Group Members and Women, pursuant to 5 NYCRR § 143, Executive Order 162, Executive Order 177, and all other applicable federal, state and local laws, rules and regulations.
Contractor will be required to submit its written policies and procedures concerning harassment and discrimination to the Authority's Office of Compliance prior to commencement of work under this Agreement.

During the performance of this contract, the Bidder/Contractor agrees to comply with the Equal Employment Opportunity (EEO) requirements specified herein.

Definitions - As used in these requirements, the following definitions will apply:

a. "Covered Area" means the geographical area described in the solicitation from which this contract resulted or the geographic area within which this contract will be performed.

b. "Authority" means the New York State Thruway Authority.

c. "Executive Director" means the Executive Director of the New York State Thruway Authority, or his/her duly authorized representative.

d. "Compliance" means the Thruway Authority's Office of Compliance or his/her duly authorized representative.

e. "Employer Identification Number" means the Federal Social Security Number used on the Employer's Quarterly Federal Tax Return, U.S. Treasury Department form 941.

f. "Minority" includes:

i) Black (all persons having origins in any of the Black African racial groups not of Hispanic origin);

ii) Hispanic (a person of Mexican, Puerto Rican, Dominican, Cuban, Central or South American descent of either Indian or Hispanic origin, regardless of race;

iii) Asian and Pacific Islander (all persons having origins in any of the original peoples of the Far East, Southeast, Asia, the Indian Subcontinent, or the Pacific Islands); and

iv) American Indian or Alaskan Native (all persons having origins in any of the original peoples of North America and maintaining identifiable tribal affiliations through membership and participation or community identification. Identification may be made by any suitable authority in the community such as an educational institution, religious organization, or a state agency).

Non-Discrimination Clause

The Bidder/Contractor will ensure equal employment opportunity by not discriminating against any applicant for employment because of race, color, religion, sex, national origin, age, disability, or marital status, regarding, (among other things) the following: upgrading, demotion, transfer, recruitment, recruitment advertising, layoff, termination, rates of pay or other forms of compensation and selection for training, including apprenticeship.

Availability Of Contractor's Records

The Bidder/Contractor will furnish all information and reports as may be required by the Authority or by rules, regulations and orders incorporated herein by the Authority and will permit access to its books, records and accounts by the Authority's Office of Compliance for purposes of monitoring and investigating compliance with these requirements and such rules, regulations, orders, procedures and guidelines.

Enforcement

In order to determine whether the Bidder/Contractor has complied with the requirements, the Authority may proceed by order to show cause, compliance conference, hearing or any other lawful procedure upon due notice in writing to the Contractor. In the event the Authority finds that the Bidder/Contractor has failed to comply with these requirements, this contract may be canceled, terminated, or suspended in whole or in part or Liquidated Damages may be imposed in accordance with the procedures authorized in Section 312 of Executive Law 15-A, provisions of the contract, relevant laws and statutes as deemed appropriate by the Authority, at no cost or liability to the Authority.

In accordance with EO 177 entitled "Prohibiting State Contracts with Entities that Support Discrimination", provisions of the contract , the Bidder/Contractor may be declared ineligible for further New York State government contract and such other sanctions may be imposed and remedies invoked as deemed appropriate by the Authority by rule, regulation, or order of the Authority, or as otherwise provided by law.

Contractor's Responsibility Regarding Collective Bargaining Agreement

Neither the provisions of any collective bargaining agreement, nor the failure by a union with whom the Bidder/Contractor has a collective bargaining agreement to refer either minorities or women shall excuse the Contractor's obligations under these requirements, any rules, regulations, procedures and guidelines promulgated or established pursuant to Executive Order 177.

Applicability To Subcontract

As per Section 312 of Executive Law 15-A the Bidder/Contractor will physically include and incorporate this document, Equal Employment Opportunity Requirements, as part of every subcontract or purchase order unless exempted by rules, regulations, or orders of the Director, pursuant to the Executive Order 8, and such requirements shall be binding upon each subcontractor, service provider, or vendor. The Bidder/Contractor will take such action with respect to any subcontract or purchase order as the Authority may direct as a means of enforcing such provisions, including sanctions for noncompliance; provided, however, that in the event the Bidder/Contractor becomes involved in or is threatened with litigation with a subcontractor or vendor as a result of any provision or direction issued pursuant to these requirements or by the Authority, the Bidder/Contractor may request the Authority/State of New York to enter into such litigation or dispute to protect the interests of the State of New York.

Equal Employment Opportunity Officer

The Bidder/Contractor will designate and make known to the Office of Compliance who will have the responsibility for and must be capable of effectively administering and promoting an active Bidder/Contractor program of equal employment opportunity and who must be assigned adequate authority and responsibility to do so.

Complaints Of Alleged Discrimination/Sexual Harassment

The Bidder/Contractor will promptly investigate all complaints of alleged discrimination/sexual harassment made to the Bidder/Contractor in connection with his/her obligations under this contract, will attempt to resolve such complaints, and will take appropriate corrective action within a reasonable time. If the investigation indicates that the discrimination/sexual harassment may affect persons other than the complainant, such corrective action shall include such other persons. Upon completion of each investigation, the Bidder/Contractor will inform every complainant of all of his or her avenues of appeal, including the New York State Division of Human Rights and Equal Employment Opportunity Commission.

The Bidder/Contractor shall inform the Office of Compliance (within 24 hours) in writing of any formal or informal, complaint, incident or any issue of discrimination/sexual harassment. Results of investigation must be submitted to the Office of Compliance within ten (10) days of the complaint.

Required Records

Pursuant to Executive Order 162, if awarded a Contract, Bidder/Contractor shall submit, to the Authority, a Quarterly Workforce Utilization/Gross Wages Reports for their firm and all of their Subcontractors.

The (Quarterly) EO 162 Workforce Utilization/Gross Wages Reporting are located on the Thruway website at: http://www.thruway.ny.gov/business/purchasing/index.html.

Workforce Utilization/Gross Wages Reports are required to be electronically submitted (Quarterly) to WorkforceUtilizationReportProcurement@newnybridge.com.

Nondiscrimination

The Bidder/Contractor shall comply with the provisions of the Human Rights Law, and all other State and Federal statutory and constitutional non-discrimination provisions. The Bidder/Contractor and its subcontractors shall not discriminate against any employee or applicant for employment because of race, creed (religion), color, sex, national origin, sexual orientation, military status, age, disability, predisposing genetic characteristic, marital status or domestic violence victim status, and shall also follow the requirements of the Human Rights Law with regard to non-discrimination on the basis of prior criminal conviction and prior arrest.

Questions regarding compliance with Workforce Utilization/Gross Wages Reporting should be directed to the Authority's Office of Compliance at 518-436-5830.

GENERAL SPECIFICATIONS

(Invitation For Bid/Request For Quotation)

PLEASE RETAIN THIS DOCUMENT FOR FUTURE REFERENCE

January 2017 (new cover page-logo update only)

TABLE OF CONTENTS

GENERAL — **PAGE**

1. Applicability 1
2. Governing Law 1
3. Appendix A 1
4. Ethics Compliance 1
5. Conflict of Terms 1
6. Definitions 1-3

BID SUBMISSION

7. International Bidding 3
8. Bid Opening 3
9. Bid Submission 3
10. Facsimile Submissions 3
11. Authentication of Facsimile Bids 3
12. Late Bids 3
13. Bid Contents 3
14. Extraneous Terms 4
15. Confidential/Trade Secret Materials 4
16. Release of Bid Evaluation Materials 5
17. Freedom of Information Law 5
18. Prevailing Wage Rates - Public Works and Building Services Contracts 5
19. Taxes 6
20. Expenses Prior to Contract Execution 6
21. Advertising Results 6
22. Product References 6
23. Remanufactured, Recycled, Recyclable Or Recovered Materials 6
24. Products Manufactured in Public Institutions 6
25. Pricing 6
26. Drawings 7
27. Site Inspection 7
28. Procurement Card 7
29. Samples 7

BID EVALUATION

30. Bid Evaluation 8
31. Conditional Bid 8
32. Clarification/Revisions 8
33. Prompt Payment Discounts 8
34. Equivalent or Identical Bids 8
35. Performance and Responsibility Qualifications 8
36. Disqualification for Past Performance 8
37. Quantity Changes Prior To Award 8
38. Timeframe for Offers 8

TERMS & CONDITIONS

39. Contract Creation/Execution 8
40. Modification of Contract Terms 8
41. Scope Changes 9
42. Estimated/Specific Quantity Contracts 9

TERMS & CONDITIONS — PAGE

43. Emergency Contracts 9
44. Purchase Orders 9
45. Product Delivery 9
46. Weekend and Holiday Deliveries 9
47. Shipping/Receipt of Product 9
48. Title and Risk of Loss 9
49. Re-Weighing Product 10
50. Product Substitution 10
51. Rejected Product 10
52. Installation 10
53. Repaired or Replaced Product/ Components 10
54. On-Site Storage 10
55. Employees/Subcontractors/Agents 10
56. Subcontractors and Suppliers 10
57. Performance/Bid Bond 10
58. Suspension of Work 10
59. Termination 10
60. Savings/Force Majeure 11
61. Contract Billings 11
62. Interest on Late Payments 11
63. Remedies for Breach 12
64. Assignment of Claim 12
65. Toxic Substances 12
66. Independent Contractor 12
67. Security 12
68. Cooperation with Third Parties 12
69. Contract Term - Renewal 12
70. Additional Warranties 12
71. Legal Compliance 13
72. Indemnification 14
73. Indemnification Relating to Third Party Rights 14
74. Limitation of Liability 14
75. Insurance 14

THE FOLLOWING CLAUSES PERTAIN TO TECHNOLOGY & NEGOTIATED CONTRACTS

76. Software License Grant 14
77. Product Acceptance 15
78. Audit of Licensed Product Usage 16
79. Ownership/Title to Project Deliverables 16
80. Proof of License 17
81. Product Version 17
82. Changes to Product or Service Offerings 17
83. No Hardstop/Passive License Monitoring 17
84. Source Code Escrow for Licensed Product 18

GENERAL

1. **APPLICABILITY** The terms and conditions set forth in this General Specification are expressly incorporated in and applicable to the resulting procurement contracts let by the New York State Thruway Authority/Canal Corporation (Authority) and shall govern such procurements or contracts unless expressly modified or amended by the terms of a Bid Specification, or a negotiated Contract/Clarification document, if any.. Captions are intended as descriptive and are not intended to limit or otherwise restrict the terms and conditions set forth herein.

2. **GOVERNING LAW** This procurement, the resulting contract and any purchase orders issued hereunder shall be governed by the laws of the State of New York except where the Federal supremacy clause requires otherwise, and actions or proceedings arising from the contract shall be heard in a court of competent jurisdiction in the State of New York.

3. **APPENDIX A** The terms of Appendix A (Standard Clauses for New York State Thruway Authority/Canal Corporation Contracts) are expressly incorporated herein.

4. **ETHICS COMPLIANCE** All Bidders/Contractors and their employees must comply with the requirements of Sections 73 and 74 of the Public Officers Law, other State codes, rules, regulations and executive orders establishing ethical standards for the conduct of business with New York State. In signing the Bid, Bidder certifies full compliance with those provisions for any present or future dealings, transactions, sales, contracts, services, offers, relationships, etc., involving the Authority and/or its employees. Failure to comply with those provisions may result in disqualification from the Bidding process, termination of contract, and/or other civil or criminal proceedings as required by law.

5. **CONFLICT OF TERMS** Unless otherwise set forth in the procurement or contract documents, conflicts among documents shall be resolved in the following order of precedence:

a. **Appendix A** (Standard Clauses for New York State Thruway Authority/Canal Corporation Contracts)

c. **Contract and other writing(s)** setting forth the final agreements, clarifications and terms between the Bid Documents and Contractor's Bid. In the latter circumstance, clarifications must specifically note in writing what was offered by the Contractor and what was accepted by the Authority. If not, such clarifications shall be considered last in the order of precedence under this paragraph.

d. **Bid Documents** (Other than Appendix A).

i. Bid Specifications prepared by the Authority.

ii. Authority General Specifications .

iii. Incorporated Contract Appendices, if any, following the order of precedence as stated for Contract above.

e. **Contractor's Bid** .

f. **Unincorporated Appendices** (if any).

6. **DEFINITIONS** Terms used in this General Specification shall have the following meanings:

AFFILIATE Any individual or other legal entity, (including but not limited to sole proprietor, partnership, limited liability company, firm or corporation) that effectively controls another company in which (a) the Bidder owns more than 50% of the ownership; or (b) any individual or other legal entity which owns more than 50% of the ownership of the Bidder. In addition, if a Bidder owns less than 50% of the ownership of another legal entity, but directs or has the right to direct such entity's daily operations, that entity will be an Affiliate.

ATTORNEY GENERAL Attorney General of the State of New York.

BID OR BID PROPOSAL An offer or proposal submitted by a Bidder to furnish a described product or a solution, perform services or means of achieving a practical end, at a stated price for the stated Contract term. As required by the Bid Documents, the Bid or proposal may be subject to modification through the solicitation by the Agency of best and final offers during the evaluation process prior to recommendation for award of the Contract.

BIDDER/OFFERER Any individual or other legal entity (including but not limited to sole proprietor, partnership, limited liability company, firm or corporation) which submits a Bid in response to a Bid Solicitation. The term Bidder shall also include the term "offeror." In the case of negotiated Contracts, "Bidder" shall refer to the "Contractor."

BID DOCUMENTS Writings setting forth the scope, terms, conditions and technical specifications for a procurement of Product. Such writings typically include, but are not limited to: Invitation for Bids (IFB), Request for Quotation (RFQ), Request for Proposals (RFP), addenda or amendments thereto, and terms and conditions which are incorporated by reference, including but not limited to, Appendix A (Standard Clauses for NYS Thruway Authority/Canal Corporation Contracts), General Specifications. Where these General Specifications are incorporated in negotiated Contracts that have not been competitively Bid, the term "Bid Documents" shall be deemed to refer to the terms and conditions set forth in the negotiated Contract and associated documentation.

BID SPECIFICATION A written description setting forth the specific terms of the intended procurement, which may include: physical or functional characteristics, the nature of a commodity or construction item, any description of the work to be performed, Products to be provided, the necessary qualifications of the Bidder, the capacity and capability of the Bidder to successfully carry out the proposed Contract, or the process for achieving specific results and/or anticipated outcomes or any other requirement necessary to perform work. Where these General Specifications are incorporated in negotiated Contracts that have not been competitively Bid, the term "Bid Specifications" shall be deemed to refer to the terms and conditions set forth in the negotiated Contract and associated documentation.

COMPTROLLER Comptroller of the State of New York.

CONTRACT The writing(s) which contain the agreement of the Authority and the Bidder/Contractor setting forth the total legal obligation between the parties as determined by applicable rules of law..

CONTRACT AWARD NOTIFICATION An announcement to all bidders that a Contract has been established between the Authority and the successful bidder..

CONTRACTOR Any successful Bidder(s) to whom a Contract has been awarded by the Authority.

DIRECTOR OF PURCHASING The Director of Purchasing for the NYS Thruway Authority/Canal Corporation.

DOCUMENTATION The complete set of manuals (e.g., user, installation, instruction or diagnostic manuals) in either hard or electronic copy, which are necessary to enable the Authority to properly test, install, operate and enjoy full use of the Product.

EMERGENCY An urgent and unexpected requirement where health and public safety or the conservation of public resources is at risk.

ENTERPRISE The total business operations in the United States of Authorized User (s) without regard to geographic location where such operations are performed or the entity actually performing such operations on behalf of the Authority.

ENTERPRISE LICENSE A license grant of unlimited rights to deploy, access, use and execute Product anywhere within the Enterprise up to the maximum capacity stated on the Purchase Order or in the Contract.

ERROR CORRECTIONS Machine executable software code furnished by Contractor which corrects the Product so as to conform to the applicable warranties, performance standards and/or obligations of the Contractor.

GROUP NUMBER A classification of products, services or technology.

INVITATION FOR BIDS (**IFB**) A type of Bid Document which is most typically used where requirements can be stated and award will be made based on lowest price to the responsive and responsible Bidder(s). Also known as **REQUEST FOR QUOTATION.**

ITEM Any material, service, equipment or supplies.

LATE BID The term late bid is defined as a bid not received in the location established in the Bid Specification at or before the date and time specified for the bid opening.

LICENSED SOFTWARE Software transferred upon the terms and conditions set forth in the Contract. "Licensed Software" includes error corrections, upgrades, enhancements or new releases, and any deliverables due under a maintenance or service contract (e.g., patches, fixes, PTFs, programs, code or data conversion, or custom programming).

LICENSEE The Authority when it acquires a Product from a Contractor by issuing a Purchase Order in accordance with the terms and conditions of the Contract

LICENSE EFFECTIVE DATE The date Product is delivered to the Authority. Where a License involves Licensee's right to copy a previously licensed and delivered Master Copy of a Program, the license effective date for additional copies shall be deemed to be the date on which the Purchase Order is executed.

LICENSOR A Contractor who transfers rights in proprietary Product to the Authority in accordance with the rights and obligations specified in the Contract.

MULTIPLE AWARD A determination and award of a Contract in the discretion of the Director or Purchasing to more than one responsive and responsible Bidder who meets the requirements of a specification, where the multiple award is made on the grounds set forth in the Bid Document in order to satisfy multiple factors and needs of the Authority (e.g., complexity of items, various manufacturers, differences in performance required to accomplish or produce required end results, production and distribution facilities, price, compliance with delivery requirements, geographic location or other pertinent factors).

NEW PRODUCT RELEASES (Product Revisions) Any commercially released revisions to the licensed version of a Product as may be generally offered and available to the Authority. New releases involve a substantial revision of functionality from a previously released version of the Product.

NOTICE OF CONTRACT AWARD A notification to the successful bidder(s) and other interested parties indicating the acceptance of a bid in response to a solicitation. Unless otherwise specified, the issuance of a Notice of Contract Award forms a contract but is not an order for Product. A Contractor should not take any action with respect to actual contract deliveries except on the basis of Purchase Orders sent from the Authority.

PROCUREMENT RECORD Documentation by the Authority of the decisions made and approach taken during the procurement process and during the contract term.

PRODUCT A deliverable under any Bid or Contract which may include commodities, services and/or technology. The term "Product" includes Licensed Software.

PROPRIETARY Protected by secrecy, patent, copyright or trademark against commercial competition.

PURCHASE ORDER The Authority's fiscal form or format that is used when making a purchase (e.g., formal written Purchase Order, Procurement Card, electronic Purchase Order, or other authorized instrument).

REQUEST FOR PROPOSALS (**RFP**) A type of Bid Document that is used for procurements where factors in addition to cost are considered and weighted in awarding the contract and where the method of award is "best value," as defined by the Authority.

REQUEST FOR QUOTATION (**RFQ**) A type of Bid Document which is most typically used where requirements can be stated and award will be made based on lowest price to the responsive and responsible Bidder(s). Also known as **INVITATION FOR BIDS**

RESPONSIBLE BIDDER A Bidder that is determined to have financial and organizational capacity, legal authority, satisfactory previous performance, skill, judgment and integrity, and that is found to be competent, reliable and experienced, as determined by the Director of Purchasing. For purposes of being deemed responsible, a Bidder must also be determined to be in compliance with Sections 139-j and 139-k of the State Finance Law relative to restrictions on contacts during the procurement process and disclosure of contacts and prior findings of non-responsibility under these statutes.

RESPONSIVE BIDDER A Bidder meeting the specifications or requirements prescribed in the Bid Document or solicitation, as determined by the Director of Purchasing.

SINGLE SOURCE A procurement where two or more Bidders can supply the required Product, and the Authority may award the contract to one Bidder over the other.

SITE The location (street address) where Product will be executed or services delivered.

SOLE SOURCE A procurement where only one Bidder is capable of supplying the required Product.

SOURCE CODE The programming statements or instructions written and expressed in any language understandable by a human being skilled in the art which are translated by a language compiler to produce executable machine Object Code.

STATE State of New York.

SUBCONTRACTOR Any individual or other legal entity, (including but not limited to sole proprietor, partnership, limited liability company, firm or corporation) who has entered into a contract, express or implied, for the performance of a portion of a Contract with a Contractor.

TERMS OF LICENSE The terms and conditions set forth in the Contract that are in effect and applicable to a Purchase Order at the time of order placement.

VIRUS Any computer code, whether or not written or conceived by Contractor, that disrupts, disables, harms, or otherwise impedes in any manner the operation of the Product, or any other associated software, firmware, hardware, or computer system (such as local area or wide-area networks), including aesthetic disruptions or distortions, but does not include security keys or other such devices installed by Product manufacturer.

BID SUBMISSION

7. INTERNATIONAL BIDDING All offers (tenders), and all information and Product required by the solicitation or provided as explanation thereof, shall be submitted in English. All prices shall be expressed, and all payments shall be made, in United States Dollars ($US). Any offers (tenders) submitted which do not meet the above criteria will be rejected.

8. BID OPENING Bids may, as applicable, be opened publicly. The Director of Purchasing reserves the right at any time to postpone or cancel a scheduled Bid opening.

9. BID SUBMISSION All Bids are to be packaged, sealed and submitted to the location stated in the Bid Specifications. Bidders are solely responsible for timely delivery of their Bids to the location set forth in the Bid Specifications prior to the stated Bid opening date/time.

A Bid return envelope, if provided with the Bid Specifications, should be used with the Bid sealed inside. If the Bid response does not fit into the envelope, the Bid envelope should be attached to the outside of the sealed box or package with the Bid inside. If using a commercial delivery company that requires use of their shipping package or envelope, Bidder's sealed Bid, labeled as detailed below, should be placed within the shipper's sealed envelope to ensure that the Bid is not prematurely opened.

All Bids must have a label on the outside of the package or shipping container outlining the following information:

"**BID ENCLOSED** (bold print, all capitals)

- Group Number
- IFB, RFQ or RFP Number
- Bid Submission date and time"

In the event that a Bidder fails to provide such information on the return Bid envelope or shipping material, the receiving entity reserves the right to open the shipping package or envelope to determine the proper Bid number or Product group, and the date and time of Bid opening. Bidder shall have no claim against the receiving entity arising from such opening and such opening shall not affect the validity of the Bid or the procurement.

Notwithstanding the Authority's right to open a Bid to ascertain the foregoing information, Bidder assumes all risk of late delivery associated with the Bid not being identified, packaged or labeled in accordance with the foregoing requirements.

All Bids must be signed by a person authorized to commit the Bidder to the terms of the Bid Documents and the content of the Bid (offer).

10. FACSIMILE SUBMISSIONS Unless specifically prohibited by the terms of the Bid Specifications, facsimile Bids may be SUBMITTED AT THE SOLE OPTION AND RISK OF THE BIDDER. Only the FAX number(s) indicated in the Bid Specifications may be used. Access to the facsimile machine(s) is on a "first come, first serve" basis, and the Authority bears no liability or responsibility and makes no guarantee whatsoever with respect to the Bidder's access to such equipment at any specific time. Bidders are solely responsible for submission and receipt of the entire facsimile Bid by the Authority prior to Bid opening and must include on the first page of the transmission the total number of pages transmitted in the facsimile, including the cover page. Incomplete, ambiguous or unreadable transmissions in whole or in part may be rejected at the sole discretion of the Director of Purchasing. Facsimile Bids are fully governed by all conditions outlined in the Bid Documents and must be submitted on forms or in the format required in the Bid Specifications, including the executed signature page and acknowledgment.

11. AUTHENTICATION OF FACSIMILE BIDS The act of submitting a Bid by facsimile transmission, including an executed signature page or as otherwise specified in the Bid Documents, shall be deemed a confirming act by Bidder which authenticates the signing of the Bid.

12. LATE BIDS Any Bid received at the specified location after the time specified will be considered a late Bid. A late Bid shall not be considered for award unless: (i) no timely Bids meeting the requirements of the Bid Documents are received or, (ii) in the case of a multiple award, an insufficient number of timely Bids were received to satisfy the multiple award; and acceptance of the late Bid is in the best interests of the Authority. Bids submitted for continuous or periodic recruitment contract awards must meet the submission requirements associated with their specifications. Delays in United States mail deliveries or any other means of transmittal, including couriers or agents of the Authority shall not excuse late Bid submissions. Similar types of delays, including but not limited to, bad weather, or security procedures for parking and building admittance shall not excuse late Bid submissions. Determinations relative to Bid timeliness shall be at the sole discretion of the Director of Purchasing.

13. BID CONTENTS Bids must be complete and legible. All Bids must be signed. All information required by the Bid Specification must be supplied by the Bidder on the forms or in the format specified. No alteration, erasure or addition is to be made to the Bid Document. Changes may be ignored by the Director of Purchasing or may be grounds for rejection of the Bid. Changes, corrections and/or use of white-out in the Bid or Bidder's response portion of the Bid Document must be initialed by an authorized representative of the Bidder. Bidders are cautioned to verify their Bids before submission, as amendments to Bids or requests for withdrawal of Bids received by the

Director of Purchasing after the time specified for the Bid opening, may not be considered.

a) The date and time of bid opening are stated on the bid document.

b) All information required by the bid document must be supplied by the bidder with the bid. The Authority reserves the right to request any information deemed necessary to evaluate a bid. If a bidder fails to provide the requested information, the bid may be rejected.

c) Prices and information required by the bid document, except the signature of the bidder, should be typewritten or printed in ink for legibility. Bids written in pencil may be rejected. The Authority may interpret or reject illegible or vague bids and the Authority's decision shall be final. All signatures must be written in ink. Facsimile, printed or typewritten signatures are not acceptable.

d) Sales to the Authority are exempt from the terms of fair trade agreements.

e) In all specifications or proposals, the word "approximate" is implied and applies to all requirements unless specifically stated otherwise. If bidding on items that differ from that which is specified, the bidder must in every instance give the trade designation of the article, manufacturer's name and the detailed specification of the item that the bidder proposes to furnish. Otherwise, the bid will be construed as submitted on the identical item described in the detailed specification.

f) Bidders may request clarification on a bid document or be requested or required to visit a proposed work site. Any clarification or information imparted shall not prevail over the written specification. An addendum to the bid document will be issued if it is deemed necessary to resolve a discrepancy.

g) Bids on equipment, materials and supplies must be on standard, new or latest model production of manufacturer. When any parts or nominal appurtenances of equipment are not described, it shall be understood that all the equipment and appurtenances which are usually provided in the manufacturer's stock model shall be furnished. Used, damaged, obsolete, surplus, or distressed items are not acceptable and if furnished will be sufficient cause for rejection and cancellation of contract.

h) All electrical items must have the acceptance and label of the Underwriters Laboratories, Inc.

i) When requested, the bidder must submit a price or "no charge" for each sub-item or group of items as required. Otherwise, the bid will be considered as incomplete and may be rejected.

j) Bids may be considered on an evaluated basis whenever the Authority deems it to be in its best interests.

k) Each Bid Document issued will indicate the method by which an award will be made, i.e., by item, groups of items, location, etc.

l) The bidder must insert the price per unit and the price extension for each item in the bid proposal if required. In the event of a discrepancy between the unit price and the extension, the unit price will govern. Prices must be extended in decimals, not fractions.

m) Prices must be net, including transportation and delivery charges fully prepaid by contractor to the destination(s) indicated in the proposal, subject only to the cash discount. If the award is to be made on any other basis, transportation charges must be prepaid by the contractor and added to the invoice as a separate item.

n) Bidder declares that the bid is made without any connection with any other bidder submitting a bid for the same items and is in all respects fair and without collusion or fraud.

o) All bids will be opened and tabulated publicly. Tabulations are available for inspection but copies of bids are not prepared for distribution. Requests for further information may be honored by the Director of Purchasing.

14. EXTRANEOUS TERMS Bids must conform to the terms set forth in the Bid Documents, as extraneous terms or material deviations (including additional, inconsistent, conflicting or alternative terms) may render the Bid non-responsive and may result in rejection of the Bid.

Extraneous term(s) submitted on standard, pre-printed forms (including but not limited to: product literature, order forms, license agreements, contracts or other documents) that are attached or referenced with submissions shall not be considered part of the Bid or resulting Contract, but shall be deemed included for informational or promotional purposes only.

Only those extraneous terms that meet all the following requirements may be considered as having been submitted as part of the Bid:

a. Each proposed extraneous term (addition, deletion, counter-offer, deviation, or modification) must be specifically enumerated in a writing which is not part of a pre-printed form; and

b. The writing must identify the particular specification requirement (if any) that Bidder rejects or proposes to modify by inclusion of the extraneous term; and

c. The Bidder shall enumerate the proposed addition, counter offer, modification or deviation from the Bid Document, and the reasons therefore.

No extraneous term(s), whether or not deemed "material," shall be incorporated into a Contract or Purchase Order unless submitted in accordance with the above and the Director of Purchasing expressly accepts each such term(s) in writing. Acceptance and/or processing of the Bid shall not constitute such written acceptance of Extraneous Term(s).

15. CONFIDENTIAL/TRADE SECRET MATERIALS

a. Contractor Confidential, trade secret or proprietary materials as defined by the laws of the State of New York must be clearly marked and identified as such upon submission by the Bidder. Marking the Bid as "confidential" or "proprietary" on its face or in the document header or footer shall not be considered by the Director of Purchasing to be sufficient without specific justification as to why disclosure of particular information in the Bid would cause substantial injury to the competitive position of the Bidder. Bidders/Contractors intending to seek an exemption from disclosure of these materials under the Freedom of Information Law must request the exemption in writing, setting forth the reasons for the claimed exemption. Acceptance of the claimed materials does not constitute a determination on the exemption request, which determination will be made in accordance with statutory procedures. Properly identified information that has been designated confidential, trade secret, or proprietary by the Bidder

will not be disclosed except as may be required by the Freedom of Information Law or other applicable State and federal laws.

b. Authority Contractor further warrants, covenants and represents that any confidential information obtained by Contractor, its agents, Subcontractors, officers, distributors, resellers or employees in the course of performing its obligations, including without limitation, security procedures, business operations information, or commercial proprietary information in the possession of the Authority hereunder or received from another third party, will not be divulged to any third parties. Contractor shall not be required to keep confidential any such material that is publicly available through no fault of Contractor, independently developed by Contractor without reliance on confidential information of the Authority , or otherwise obtained under the Freedom of Information Act or other applicable New York State laws and regulations. This warranty shall survive termination of this Contract. Contractor further agrees to take appropriate steps as to its agents, Subcontractors, officers, distributors, resellers or employees regarding the obligations arising under this clause to insure such confidentiality.

16. RELEASE OF BID EVALUATION MATERIALS Requests concerning the evaluation of Bids may be submitted under the Freedom of Information Law. Information, other than statistical or factual tabulations or data such as the Bid Tabulation, shall only be released as required by law after Contract award. Bid Tabulations are not maintained for all procurements. Names of Bidders may be disclosed after Bid opening upon request. Written requests should be directed to the Director of Purchasing.

17. FREEDOM OF INFORMATION LAW During the evaluation process, the content of each Bid will be held in confidence and details of any Bid will not be revealed (except as may be required under the Freedom of Information Law or other State law). The Freedom of Information Law provides for an exemption from disclosure for trade secrets or information the disclosure of which would cause injury to the competitive position of commercial enterprises. This exception would be effective both during and after the evaluation process. If the Bid contains any such trade secret or other confidential or proprietary information, it must be accompanied in the Bid with a written request to the Director of Purchasing to not disclose such information. Such request must state with particularity the reasons why the information should not be available for disclosure and must be provided at the time of submission of the Bid. Notations in the header, footer or watermark of the Bid Document will not be considered sufficient to constitute a request for non-disclosure of trade secret or other confidential or proprietary information. Where a Freedom of Information request is made for trademark or other confidential or proprietary information, theAuthority reserves the right to determine upon written notice to the Bidder whether such information qualifies for the exemption for disclosure under the law. Notwithstanding the above, where a Bid tabulation is prepared and Bids publicly opened, such Bid tabulation shall be available upon request.

18. PREVAILING WAGE RATES - PUBLIC WORKS AND BUILDING SERVICES CONTRACTS If any portion of work being Bid is subject to the prevailing wage rate provisions of the Labor Law, the following shall apply:

a. "Public Works" and "Building Services" - Definitions

i. Public Works Labor Law Article 8 applies to contracts for public improvement in which laborers, workers or mechanics are employed on a "public works" project (distinguished from public "procurement" or "service" contracts). The Authority must be a party to the Contract. The wage and hours provision applies to any work performed by Contractor or Subcontractors.

ii. Building Services Labor Law Article 9 applies to Contracts for building service work over $1,500 with a public agency, that: (i) involve the care or maintenance of an existing building, or (ii) involve the transportation of office furniture or equipment to or from such building, or (iii) involve the transportation and delivery of fossil fuel to such building, and (iv) the principal purpose of which is to furnish services through use of building service employees.

b. Prevailing Wage Rate Applicable to Bid Submissions A copy of the applicable prevailing wage rates to be paid or provided are available by accessing the internet address listed in the Bid Document or annexed to the Bid Documents. Bidders must submit Bids which are based upon the prevailing hourly wages, and supplements in cash or equivalent benefits (i.e., fringe benefits and any cash or non-cash compensation which are not wages, as defined by law) that equal or exceed the applicable prevailing wage rate(s) for the location where the work is to be performed. Bidders may not submit Bids based upon hourly wage rates and supplements below the applicable prevailing wage rates as established by the New York State Department of Labor. Bids that fail to comply with this requirement will be disqualified.

c. Wage Rate Payments / Changes During Contract Term The wages to be paid under any resulting Contract shall not be less than the prevailing rate of wages and supplements as set forth by law. It is required that the Contractor keep informed of all changes in the Prevailing Wage Rates during the Contract term that apply to the classes of individuals supplied by the Contractor on any projects resulting from this Contract, subject to the provisions of the Labor Law. Contractor is solely liable for and must pay such required prevailing wage adjustments during the Contract term as required by law.

d. Public Posting & Certified Payroll Records In compliance with Article 8, Section 220 of the New York State Labor Law:

i. Posting The Contractor must publicly post on the work site, in a prominent and accessible place, a legible schedule of the prevailing wage rates and supplements.

ii. Payroll Records Contractors and Subcontractors must keep original payrolls or transcripts subscribed and affirmed as true under the penalties of perjury as required by law. For public works contracts over $25,000 where the Contractor maintains no regular place of business in New York State, such records must be kept at the work site. For building services contracts, such records must be kept at the work site while work is being performed.

iii. Submission of Certified Payroll Transcripts for Public Works Contracts Only Contractors and Subcontractors on public works projects must submit monthly payroll transcripts to the Authority Upon mutual agreement of the Contractor and the Authority, the form of submission may be submitted in a specified disk format acceptable to the Department of Labor provided: 1) the Contractor/Subcontractor retains the original records; and, (2) an original signed letter by a duly authorized individual of the Contractor or Subcontractor attesting to the truth and accuracy of the records accompanies the disk. This provision does not apply to Article 9 of the Labor Law building services contracts.

iv. Records Retention Contractors and Subcontractors must preserve such certified transcripts for a period of three years from the date of completion of work on the awarded contract.

Day's Labor Eight hours shall constitute a legal day's work for all classes of employees in this state except those engaged in farm and domestic service unless otherwise provided by law.

No laborers, workmen or mechanics in the employ of the Contractor, Subcontractor or other person doing or contracting to do all or part of the work contemplated by the Contract shall be permitted or required to work more than eight hours in any one calendar day or more than five calendar days in any one week except in cases of extraordinary emergency including fire, flood or danger to life or property. "Extraordinary emergency" shall be deemed to include situations in which sufficient laborers, workers and mechanics cannot be employed to carry on public work expeditiously as a result of such restrictions upon the number of hours and days of labor and the immediate commencement or prosecution or completion without undue delay of the public work is necessary in the judgment of the NYS Commissioner of Labor for the preservation of the Contract site or for the protection of the life and limb of the persons using the Contract site.

19. TAXES

a. Unless otherwise specified in the Bid Specifications or Contract, the quoted Bid price includes all taxes applicable to the transaction.

b. Purchases made by the Authority are exempt from New York State and local sales taxes and, with certain exceptions, federal excise taxes. To satisfy the requirements of the New York State Sales tax exemption, either the Purchase Order issued by the Authority or the invoice forwarded to authorize payment for such purchases will be sufficient evidence that the sale by the Contractor was made to the State, an exempt organization under Section 1116 (a) (1) of the Tax Law. No person, firm or corporation is, however, exempt from paying the State Truck Mileage and Unemployment Insurance or Federal Social Security taxes, which remain the sole responsibility of the Bidder/Contractor.

c. Pursuant to Revised Tax Law 5-a, Contractor will be required to furnish sales tax certification on its behalf and for its affiliates, and subcontractors for Contracts with a value greater than $100,000 in accordance with provisions of the law.

20. EXPENSES PRIOR TO CONTRACT EXECUTION The Authority is not liable for any costs incurred by a Vendor, Bidder or Contractor in the preparation and production of a Bid, Mini-Bid or best and final offers or for any work performed prior to Contract execution.

21. ADVERTISING RESULTS The prior written approval of the Authority is required in order for results of the Bid to be used by the Contractor as part of any commercial advertising. The Contractor shall also obtain the prior written approval of the Authority relative to the Bid or Contract for press or other media releases.

22. PRODUCT REFERENCES

a. "**Or Equal**" In all Bid Specifications the words "or equal" are understood to apply where a copyrighted, brand name, trade name, catalog reference, or patented Product is referenced. References to such specific Product are intended as descriptive, not restrictive, unless otherwise stated. Comparable Product will be considered if proof of compatibility is provided, including appropriate catalog excerpts, descriptive literature, specifications and test data, etc. The Director of Purchasing's decision as to acceptance of the Product as equal shall be final.

b. Discrepancies in References In the event of a discrepancy between the model number referenced in the Bid Specifications and the written description of the Products which cannot be reconciled, with respect to such discrepancy, then the written description shall prevail.

23. REMANUFACTURED, RECYCLED, RECYCLABLE OR RECOVERED MATERIALS Upon the conditions specified in the Bid Specifications and in accordance with the laws of the State of New York, Contractors are encouraged to use recycled, recyclable or recovered materials in the manufacture of Products and packaging to the maximum extent practicable without jeopardizing the performance or intended end use of the Product or packaging unless such use is precluded due to health, welfare, safety requirements or in the Bid Specifications. Contractors are further encouraged to offer remanufactured Products to the maximum extent practicable without jeopardizing the performance or intended end use of the Product and unless such use is precluded due to health, welfare, safety requirements or by the Bid Specifications. Where such use is not practical, suitable, or permitted by the Bid Specifications, Contractor shall deliver new materials in accordance with the "Warranties" set forth below.

Items with recycled, recyclable, recovered, refurbished or remanufactured content must be identified in the Bid or Bidder will be deemed to be offering new Product.

24. PRODUCTS MANUFACTURED IN PUBLIC INSTITUTIONS Bids offering Products that are manufactured or produced in public institutions will be rejected.

25. PRICING

a. Unit Pricing If required by the Bid Specifications, the Bidder should insert the price per unit specified and the price extensions in decimals, not to exceed four places for each item unless otherwise specified, in the Bid. In the event of a discrepancy between the unit price and the extension, the unit price shall govern unless, in the sole judgment of the Director of Purchasing, such unit pricing is obviously erroneous.

b. Net Pricing Unless otherwise required by the Bid Specifications, prices shall be net, including transportation, customs, tariff, delivery and other charges fully prepaid by the Contractor to the destination(s) indicated in the Bid Specifications, subject to the cash discount.

c. "No Charge" Bid When Bids are requested on a number of Products as a Group or Lot, a Bidder desiring to Bid "no charge" on a Product in the Group or Lot must clearly indicate such. Otherwise, such Bid may be considered incomplete and be rejected, in whole or in part, at the discretion of the Director of Purchasing.

d. Educational Pricing All Products to be supplied for educational purposes that are subject to educational discounts shall be identified in the Bid and such discounts shall be made available to the Authority.

e. Third Party Financing If Product acquisitions are financed through any third party financing, Contractor may be required as a condition of Contract Award to agree to the terms and conditions of a "Consent & Acknowledgment Agreement" in a form acceptable to the Director of Purchasing.

f. Best Pricing Offer During the Contract term, if substantially the same or a smaller quantity of a Product is sold by the Contractor outside of this Contract upon the same or similar terms and conditions as that of this Contract at a lower price to a federal, state or local governmental entity, the price under this Contract, at the discretion of the Director of Purchasing, shall be immediately reduced to the lower price.

Price decreases shall take effect automatically during the Contract term and apply to Purchase Orders submitted on or after:
(i) **GSA Changes**: Where the Authority's Net Prices are based on an approved GSA Schedule, the date the approved GSA Schedule pricing decreases during the Contract term; or
(ii) **Commercial Price List Reductions**: Where the Authority's Net Prices are based on a discount from Contractor's list prices, the date Contractor lowers its pricing to its customers generally or to similarly situated government customers during the Contract term; or
(iii) **Special Offers/Promotions Generally**: Where Contractor generally offers more advantageous special price promotions or special discount pricing to other customers during the Contract term for a similar quantity, and the maximum price or discount associated with such offer or promotion is better than the discount or Net Price otherwise available under this Contract, such better price or discount shall apply for similar quantity transactions under this Contract for the life of such general offer or promotion.

Unless otherwise specified in the Bid Specifications, Contractor may offer lower prices or better terms (see Modification of Contract Terms) on any specific Authority Purchase Order(s) without being in conflict with, or obligation to comply on a global basis.

g. **Best and Final Prices** As specified in the Bid Documents and Contract, a Contractor may be solicited at the time of issuance of a Purchase Order for best and final pricing for the Product or service to be delivered to the Authority. Contractors are encouraged to reduce their pricing upon receipt of such request.

26. **DRAWINGS**
a. **Drawings Submitted With Bid** When the Bid Specifications require the Bidder to furnish drawings and/or plans, such drawings and/or plans shall conform to the mandates of the Bid Documents and shall, when approved by the Director of Purchasing, be considered a part of the Bid and of any resulting Contract. All symbols and other representations appearing on the drawings shall be considered a part of the drawing.

b. **Drawings Submitted During the Contract Term** Where required to develop, maintain and deliver diagrams or other technical schematics regarding the scope of work, Contractor shall do so on an ongoing basis at no additional charge, and must, as a condition of payment, update drawings and plans during the Contract term to reflect additions, alterations, and deletions. Such drawings and diagrams shall be delivered to the Authority's representative.

c. **Accuracy of Drawings Submitted** All drawings shall be neat and professional in manner and shall be clearly labeled as to locations and type of product, connections and components. Drawings and diagrams are to be in compliance with accepted drafting standards. Acceptance or approval of such plans shall not relieve the Contractor from responsibility for design or other errors of any sort in the drawings or plans, or from its responsibility for performing as required, furnishing product, services or installation, or carrying out any other requirements of the intended scope of work.

27. **SITE INSPECTION** Where a site inspection is required by the Bid Specifications or Project Definition, Bidder shall be required to inspect the site, including environmental or other conditions for pre-existing deficiencies that may affect the installed Product, equipment, or environment or services to be provided and, which may affect Bidder's ability to properly deliver, install or otherwise provide the required Product. All inquiries regarding such conditions shall be made in writing. Bidder shall be deemed to have knowledge of any deficiencies or conditions which such inspection or inquiry might have disclosed. Bidder must provide a detailed explanation with its Bid if additional work is required under this clause in order to properly complete the delivery and installation of the required Product or provide the requested service.

28. **PROCUREMENT CARD** The Authority has entered into an agreement for purchasing card services. The Purchasing Card enables Authorized Users to make authorized purchases directly from a Contractor without processing a Purchase Orders or Purchase Authorizations. Purchasing Cards are issued to selected employees authorized to purchase for the Authorized User and having direct contact with Contractors. Cardholders can make purchases directly from any Contractor that accepts the Authority's Procurement Card.

The Contractor shall not process a transaction for payment through the credit card clearinghouse until the purchased products have been shipped or services performed. Unless the cardholder requests correction or replacement of a defective or faulty Product in accordance with other Contract requirements, the Contractor shall immediately credit a cardholder's account for products returned as defective or faulty.

29. **SAMPLES**
a. **Standard Samples** Bid Specifications may indicate that the Product to be purchased must be equal to a standard sample on display in a place designated by the Director of Purchasing and such sample will be made available to the Bidder for examination prior to the opening date. Failure by the Bidder to examine such sample shall not entitle the Bidder to any relief from the conditions imposed by the Bid Specifications.

b. **Bidder Supplied Samples** The Director of Purchasing reserves the right to request from the Bidder/Contractor a representative sample(s) of the Product offered at any time prior to or after award of a contract. Unless otherwise instructed, samples shall be furnished within the time specified in the request. Untimely submission of a sample may constitute grounds for rejection of Bid or cancellation of the Contract. Samples must be submitted free of charge and be accompanied by the Bidder's name and address, any descriptive literature relating to the Product and a statement indicating how and where the sample is to be returned. Where applicable, samples must be properly labeled with the appropriate Bid or Contract reference.

A sample may be held by the Director of Purchasing during the entire term of the Contract and for a reasonable period thereafter for comparison with deliveries. At the conclusion of the holding period the sample, where feasible, will be returned as instructed by the Bidder, at the Bidder's expense and risk. Where the Bidder has failed to fully instruct the Director of Purchasing as to the return of the sample (i.e., mode and place of return, etc.) or refuses to bear the cost of its return, the sample shall become the sole property of the receiving entity at the conclusion of the holding period.

c. **Enhanced Samples** When an approved sample exceeds the minimum specifications, all Product delivered must be of the same enhanced quality and identity as the sample. Thereafter, in the event of a Contractor's default, the Director of Purchasing may procure a Product substantially equal to the enhanced sample from other sources, charging the Contractor for any additional costs incurred.

d. **Conformance with Sample(s)** Submission of a sample (whether or not such sample is tested by, or for, the Director of Purchasing) and approval thereof shall not relieve the Contractor from full compliance with all terms and conditions, performance related and otherwise, specified in the Bid Specifications. If in the judgment of the Director of Purchasing the sample or product submitted is not in accordance

with the specifications or testing requirements prescribed in the Bid Specifications, the Director of Purchasing may reject the Bid. If an award has been made, the Director of Purchasing may cancel the Contract at the expense of the Contractor.

e. Testing All samples are subject to tests in the manner and place designated by the Director of Purchasing, either prior to or after Contract award. Unless otherwise stated in the Bid Specifications, Bidder samples consumed or rendered useless by testing will not be returned to the Bidder. Testing costs for samples that fails to meet Contract requirements may be at the expense of the Contractor.

BID EVALUATION

30. BID EVALUATION The Director of Purchasing reserves the right to accept or reject any and all Bids, or separable portions of offers, and waive technicalities, irregularities, and omissions if the Director of Purchasing determines the best interests of the Authority will be served. The Director of Purchasing, in his/her sole discretion, may accept or reject illegible, incomplete or vague Bids and his/her decision shall be final. A conditional or revocable Bid which clearly communicates the terms or limitations of acceptance may be considered, and Contract award may be made in compliance with the Bidder's conditional or revocable terms in the offer.

31. CONDITIONAL BID Unless the Bid Specifications provides otherwise, a Bid is not rendered non-responsive if the Bidder specifies that the award will be accepted only on all or a specified group of items or Product included in the specification. It is understood that nothing herein shall be deemed to change or alter the method of award contained in the Bid Documents.

32. CLARIFICATIONS / REVISIONS Prior to award, the Director of Purchasing reserves the right to seek clarifications, request Bid revisions, or to request any information deemed necessary for proper evaluation of Bids from all Bidders deemed to be eligible for Contract award. Failure to provide requested information may result in rejection of the Bid.

33. PROMPT PAYMENT DISCOUNTS While prompt payment discounts will not be considered in determining the low Bid, the Director of Purchasing may consider any prompt payment discount in resolving Bids which are otherwise tied. However, any notation indicating that the price is net, (e.g., net 30 days), shall be understood to mean only that no prompt payment discount is offered by the Bidder. The imposition of service, interest, or other charges, except pursuant to the provisions of Article 11-A of the State Finance Law, which are applicable in any case, may render the Bid non-responsive and may be cause for its rejection.

34. EQUIVALENT OR IDENTICAL BIDS In the event two offers are found to be substantially equivalent, price shall be the basis for determining the award recipient. If two or more Bidders submit substantially equivalent Bids as to pricing or other factors, the decision of the Director of Purchasing to award a Contract to one or more of such Bidders shall be final.

35. PERFORMANCE AND RESPONSIBILITY QUALIFICATIONS The Director of Purchasing reserves the right to investigate or inspect at any time whether or not the Product, services, qualifications or facilities offered by the Bidder/Contractor meet the requirements set forth in the Bid Specifications/Contract or as set forth during Contract negotiations. Contractor shall at all times during the Contract term remain responsible and responsive. A Bidder/Contractor must be prepared, if requested by the Director of Purchasing, to present evidence of legal authority to do business in New York State, integrity, experience, ability, prior performance, organizational and financial capacity as well as where applicable, a statement as to supply, plant, machinery and capacity of the manufacturer or source for the production, distribution and servicing of the Product offered/Bid. If the Director of Purchasing determines that the conditions and terms of the Bid Documents, Bid Specifications or Contract are not complied with, or that items, services or Product proposed to be furnished do not meet the specified requirements, or that the legal authority, integrity experience, ability, prior performance, organization and financial capacity or facilities are not satisfactory, the Director of Purchasing may reject such Bid or terminate the Contract.

36. DISQUALIFICATION FOR PAST PERFORMANCE AND FINDINGS OF NON-RESPONSIBILITY Bidder may be disqualified from receiving awards if Bidder, or anyone in Bidder's employment, has previously failed to perform satisfactorily in connection with public Bidding or contracts or is deemed non-responsible.

37. QUANTITY CHANGES PRIOR TO AWARD The Director of Purchasing reserves the right, at any time prior to the award of a specific quantity Contract, to alter in good faith the quantities listed in the Bid Specifications. In the event such right is exercised, the lowest responsible Bidder meeting Bid Specifications will be advised of the revised quantities and afforded an opportunity to extend or reduce its Bid price in relation to the changed quantities. Refusal by the low Bidder to so extend or reduce its Bid price may result in the rejection of its Bid and the award of such Contract to the lowest responsible Bidder who accepts the revised qualifications.

38. TIMEFRAME FOR OFFERS The Director of Purchasing reserves the right to make awards within sixty (60) days after the date of the Bid opening or such other period of time as set forth in the Bid Documents, during which period, Bids must remain firm and cannot e withdrawn. If, however, if an award is not made within the sixty (60) day period or other time specified as set forth in the Bid Documents, the Bids shall remain firm until such later time as either a Contract is awarded or the Bidder delivers to the Director of Purchasing written notice of the withdrawal of its Bid. Any Bid which expressly states therein that acceptance must be made within a shorter specified time, may at the sole discretion of the Director of Purchasing, be accepted or rejected.

TERMS & CONDITIONS

39. CONTRACT CREATION / EXECUTION Upon receipt of all required approvals, a Contract shall be deemed executed and created with the successful Bidder(s) upon the Director of Purchasing's mailing or electronic communication to the address on the Bid/Contract of: (i) the final Contract Award Notice; (ii) a fully executed Contract; or (iii) a Purchase Order authorized by the Director of Purchasing.

40. MODIFICATION OF CONTRACT TERMS The terms and conditions set forth in the Contract shall govern all transactions under this Contract. The Contract may only be modified or amended upon mutual written agreement of the Director of Purchasing and Contractor.

The Contractor may, however, offer the Authority more advantageous pricing, payment, or other terms and conditions than those set forth in

the Contract. In such event, a copy of such terms shall be furnished to the Director of Purchasing by the Contractor at the time of such offer.

Other than where such terms are more advantageous for the Authority than those set forth in the Contract, no alteration or modification of the terms of the Contract, including substitution of Product, shall be valid or binding against the Authority unless authorized by the Director of Purchasing or specified in the Contract Award Notification. No such alteration or modification shall be made by unilaterally affixing such terms to Product upon delivery (including, but not limited to, attachment or inclusion of standard pre-printed order forms, product literature, "shrink wrap" terms accompanying software upon delivery, or other documents) or by incorporating such terms onto order forms, purchase orders or other documents forwarded by the Contractor for payment, notwithstanding the Authority's subsequent acceptance of Product, or that Authority has subsequently processed such document for approval or payment.

41. SCOPE CHANGES The Director of Purchasing reserves the right, unilaterally, to require, by written order, changes by altering, adding to or deducting from the Bid Specifications, such changes to be within the general scope of the Contract. The Director of Purchasing may make an equitable adjustment in the Contract price or delivery date if the change affects the cost or time of performance. Such equitable adjustments require the consent of the Contractor, which consent shall not be unreasonably withheld.

42. ESTIMATED / SPECIFIC QUANTITY CONTRACTS Estimated quantity contracts are expressly agreed and understood to be made for only the quantities, if any, actually ordered during the Contract term. No guarantee of any quantity(s) is implied or given. Unless set forth in the Bid Specifications, Contracts for services and technology are completely voluntary as to use, therefore no quantities are guaranteed.

With respect to any specific quantity stated in the contract, the Director of Purchasing reserves the right after award to order up to 20% more or less (rounded to the next highest whole number) than the specific quantities called for in the Contract. Notwithstanding the foregoing, the Director of Purchasing may purchase greater or lesser percentages of Contract quantities should the Director of Purchasing and Contractor so agree. Such agreement may include an equitable price adjustment.

43. EMERGENCY CONTRACTS If an emergency is declared according to Authority policy and a prompt and immediate delivery of a product is required, the Authority reserves the right to obtain such Product from any source, including but not limited to this Contract(s), as the Authority in its sole discretion determines will meet the needs of such emergency. Contractor shall not be entitled to any claim or lost profits for Product procured from other sources pursuant to this paragraph. The reasons underlying the finding that an emergency exists shall be included in the procurement record.

44. PURCHASE ORDERS Unless otherwise authorized in writing by the Director of Purchasing, no Product is to be delivered or furnished by Contractor until transmittal of an official Purchase Order from the Authority. Unless terminated or cancelled pursuant to the authority vested in the Director of Purchasing, Purchase Orders shall be effective and binding upon the Contractor when placed in the mail or electronically transmitted prior to the termination of the contract period, addressed to the Contractor at the address for receipt of orders set forth in the Contract or in the Contract Award Notification.

All Purchase Orders issued pursuant to Contracts let by the Authority must bear the appropriate Contract number.. The Authority reserves the right to require any other information from the Contractor which the Authority deems necessary in order to complete any Purchase Order placed under the Contract. Any discrepancy between the terms stated on the vendor's order form, confirmation or acknowledgement, and the contract terms shall be resolved in favor of the terms most favorable to the Authority.

45. PRODUCT DELIVERY Delivery must be made as ordered to the address specified on the Purchase Order and in accordance with the terms of the Contract or Contract Award Notice. Unless otherwise specified in the Bid Documents, delivery shall be made within thirty calendar days after receipt of a Purchase Order by the Contractor. The decision of the Director of Purchasing as to compliance with delivery terms shall be final. The burden of proof for delay in receipt of Purchase Order shall rest with the Contractor. In all instances of a potential or actual delay in delivery, the Contractor shall immediately notify the Director of Purchasing, and confirm in writing the explanation of the delay, and take appropriate action to avoid any subsequent late deliveries. Any extension of time for delivery must be requested in writing by the Contractor and approved in writing by the Director of Purchasing. Failure to meet such delivery time schedule may be grounds for cancellation of the order or, in the Director of Purchasing discretion, the Contract.

46. WEEKEND AND HOLIDAY DELIVERIES Unless otherwise specified in the Bid Specifications or by the Authority, deliveries will be scheduled for ordinary business hours, Monday through Friday (excluding legal holidays observed by the State of New York). Deliveries may be scheduled by mutual agreement for Saturdays, Sundays or legal holidays observed by the State of New York where the Product is for daily consumption, an emergency exists, the delivery is a replacement, delivery is late, or other reasonable circumstance in which event the convenience of the Authority shall govern.

47. SHIPPING/RECEIPT OF PRODUCT

a. Packaging Tangible Product shall be securely and properly packed for shipment, storage and stocking in appropriate, clearly labeled shipping containers and according to accepted commercial practice, without any extra charges for packing materials, cases or other types of containers. The container shall become and remain the property of the Authority unless otherwise specified in the Contract documents.

b. Shipping Charges Unless otherwise stated in the Bid Specifications, all deliveries shall be deemed to be freight on board (F.O.B.) destination tailgate delivery at the dock of the Authority. Unless otherwise agreed, items purchased at a price F.O.B. Shipping point plus transportation charges shall not relieve the Contractor from responsibility for safe and proper delivery notwithstanding the Authority's payment of transportation charges. Contractor shall be responsible for ensuring that the Bill of Lading states "charges prepaid" for all shipments.

c. Receipt of Product The Contractor shall be solely responsible for assuring that deliveries are made to personnel authorized to accept delivery on behalf of the Authority. Any losses resulting from the Contractor's failure to deliver Product to authorized personnel shall be borne exclusively by the Contractor.

48. TITLE AND RISK OF LOSS Notwithstanding the form of shipment, title or other property interest, risk of loss shall not pass from the Contractor to the Authority until the Products have been received, inspected and accepted by the receiving entity. Acceptance shall occur within a reasonable time or in accordance with such other defined acceptance period as may be specified in the Bid Specifications or Purchase Order. Mere acknowledgment by the

Authority personnel of the delivery or receipt of goods (e.g., signed bill of lading) shall not be deemed or construed as acceptance of the Products received. Any delivery of Product that is substandard or does not comply with the Bid Specifications or Contract terms and conditions, may be rejected or accepted on an adjusted price basis, as determined by the Director of Purchasing.

49. RE-WEIGHING PRODUCT Deliveries are subject to re-weighing at the point of destination by the Authority. If shrinkage occurs which exceeds that normally allowable in the trade, the Authority shall have the option to require delivery of the difference in quantity or to reduce the payment accordingly. Such option shall be exercised in writing by the Authority.

50. PRODUCT SUBSTITUTION In the event a specified manufacturer's Product listed in the Contract becomes unavailable or cannot be supplied by the Contractor for any reason (except as provided for in the Savings/Force Majeure Clause) a Product deemed in writing by the Director of Purchasing to be equal to or better than the specified Product must be substituted by the Contractor at no additional cost or expense to the Authority. Unless otherwise specified, any substitution of Product prior to the Director of Purchasing written approval may be cause for cancellation of Contract.

51. REJECTED PRODUCT When Product is rejected, it must be removed by the Contractor from the premises of the Authority within ten calendar days of notification of rejection unless arranged otherwise by the Authority. Upon notification of rejection, risk of loss of rejected or non-conforming Product shall remain with Contractor. Rejected items not removed by the Contractor within ten calendar days (or otherwise arranged by the Authority) of notification shall be regarded as abandoned by the Contractor, and the Authority shall have the right to dispose of Product as its own property. The Contractor shall promptly reimburse the Authority for any and all costs and expenses incurred in storage or effecting removal or disposition after the ten-calendar day (or otherwise arranged) period.

52. INSTALLATION Where installation is required, Contractor shall be responsible for placing and installing the Product in the required locations. All materials used in the installation shall be of good quality and shall be free from any and all defects that would mar the appearance of the Product or render it structurally unsound. Installation includes the furnishing of any equipment, rigging and materials required to install or place the Product in the proper location. The Contractor shall protect the site from damage for all its work and shall repair damages or injury of any kind caused by the Contractor, its employees, officers or agents. If any alteration, dismantling or excavation, etc. is required to effect installation, the Contractor shall thereafter promptly restore the structure or site. Work shall be performed to cause the least inconvenience to the Authority and with proper consideration for the rights of other Contractors or workers. The Contractor shall promptly perform its work and shall coordinate its activities with those of other Contractors. The Contractor shall clean up and remove all debris and rubbish from its work as required or directed. Upon completion of the work, the building and surrounding area of work shall be left clean and in a neat, unobstructed condition, and everything in satisfactory repair and order.

53. REPAIRED OR REPLACED PARTS / COMPONENTS Where the Contractor is required to repair, replace or substitute Product or parts or components of the Product under the Contract, the repaired, replaced or substituted Products shall be subject to all terms and conditions for new parts and components set forth in the Contract including Warranties, as set forth in the Additional Warranties Clause herein. Replaced or repaired Product or parts and components of such Product shall be new and shall, if available, be replaced by the original manufacturer's component or part. Remanufactured parts or components meeting new Product standards may be permitted by the Director of Purchasing. Before installation, all proposed substitutes for the original manufacturer's installed parts or components must be approved by the Director of Purchasing. The part or component shall be equal to or of better quality than the original part or component being replaced.

54. ON-SITE STORAGE With the written approval of the Authority, materials, equipment or supplies may be stored at the Authority's site at the Contractor's sole risk.

55. EMPLOYEES, SUBCONTRACTORS & AGENTS All employees, Subcontractors or agents performing work under the Contract must be trained staff or technicians who meet or exceed the professional, technical and training qualifications set forth in the Bid Specifications or the Bid Documents, whichever is more restrictive, and must comply with all security and administrative requirements of the Authority. The Director of Purchasing reserves the right to conduct a security background check or otherwise approve any employee, Subcontractor or agent furnished by Contractor and to refuse access to or require replacement of any personnel for cause based on, including but not limited to, professional, technical or training qualifications, quality of work or change in security status or non-compliance with the Authority's security or other requirements. Such approval shall not relieve the Contractor of the obligation to perform all work in compliance with the Contract terms. The Director of Purchasing reserves the right to reject and/or bar from the facility for cause any employee, Subcontractor, or agents of the Contractor.

56. SUBCONTRACTORS AND SUPPLIERS The Director of Purchasing reserves the right to reject any proposed Subcontractor or supplier for bona fide business reasons, which may include, but are not limited to: they are on the Department of Labor's list of companies with which New York State cannot do business; the Director of Purchasing determines that the company is not qualified; the Director of Purchasing determines that the company is not responsible; the company has previously provided unsatisfactory work or services; the company failed to solicit minority and women's business enterprises (M/WBE) Bidders as required by prior Contracts.

57. PERFORMANCE / BID BOND The Director of Purchasing reserves the right to require a Bidder or Contractor to furnish without additional cost, a performance, payment or Bid bond or negotiable irrevocable letter of credit or other form of security for the faithful performance of the Contract. Where required, such bond or other security shall be in the form prescribed by the Director of Purchasing.

58. SUSPENSION OF WORK The Director of Purchasing, in his/her sole discretion, reserves the right to suspend any or all activities under this Contract, at any time, in the best interests of the Authority. In the event of such suspension, the Contractor will be given a formal written notice outlining the particulars of such suspension. Examples of the reason for such suspension include, but are not limited to, a budget freeze or reduction on Authority spending, declaration of emergency, contract compliance issues or other such circumstances. Upon issuance of such notice, the Contractor is not to accept any Purchase Orders, and shall comply with the suspension order. Activity may resume at such time as the Director of Purchasing issues a formal written notice authorizing a resumption of performance under the Contract.

59. TERMINATION

a. For Cause: For a material breach that remains uncured for more than thirty (30) days or other specified period after written notice to the Contractor, the Contract or Purchase Order may be terminated by the Director of Purchasing at the Contractor's expense where Contractor

becomes unable or incapable of performing, or meeting any requirements or qualifications set forth in the Contract, or for non-performance, or upon a determination that Contractor is non-responsible. Such termination shall be upon written notice to the Contractor. In such event, the Director of Purchasing may complete the contractual requirements in any manner it may deem advisable and pursue available legal or equitable remedies for breach.

b. For Convenience: By written notice, this Contract may be terminated at any time by the Authority for convenience upon sixty (60) days written notice or other specified period without penalty or other early termination charges due. Such termination of the Contract shall not affect any project or Purchase Order that has been issued under the Contract prior to the date of such termination. If the Contract is terminated pursuant to this subdivision, the Authority shall remain liable for all accrued but unpaid charges incurred through the date of the termination. Contractor shall use due diligence and provide any outstanding deliverables. This provision should not be understood as waiving the Authority's right to terminate the contract for cause or stop work immediately for unsatisfactory work, but is supplementary to that provision. Any such cancellation shall have no effect on existing Authority agreements, which are subject to the same 60 day discretionary cancellation or cancellation for cause.

c. For Violation of the Sections 139-j and 139-k of the State Finance Law: The Authority reserves the right to terminate the Contract in the event it is found that the certification filed by the Bidder in accordance with Section 139-k of the State Finance Law was intentionally false or intentionally incomplete. Upon such finding, the Authority may exercise its termination right by providing written notification to the Contractor in accordance with the written notification terms of the Contract.

d. For Violation of Revised Tax Law 5a: The Authority reserves the right to terminate the contract in the event it is found that the certification filed by the Contractor in accordance with §5-a of the Tax Law is not timely filed during the term of the Contract or the certification furnished was intentionally false or intentionally incomplete. Upon such finding, the Authority may exercise its termination right by providing written notification to the Contractor.

60. <u>SAVINGS/FORCE MAJEURE</u> A force majeure occurrence is an event or effect that cannot be reasonably anticipated or controlled. Force majeure includes, but is not limited to, acts of God, acts of war, acts of public enemies, strikes, fires, explosions, actions of the elements, floods, or other similar causes beyond the control of the Contractor or the Authority in the performance of the Contract which non- performance, by exercise of reasonable diligence, cannot be prevented. Contractor shall provide the Director of Purchasing with written notice of any force majeure occurrence as soon as the delay is known.

Neither the Contractor nor the Authority shall be liable to the other for any delay in or failure of performance under the Contract due to a force majeure occurrence. Any such delay in or failure of performance shall not constitute default or give rise to any liability for damages. The existence of such causes of such delay or failure shall extend the period for performance to such extent as determined by the Contractor and the Director of Purchasing to be necessary to enable complete performance by the Contractor if reasonable diligence is exercised after the cause of delay or failure has been removed.

Notwithstanding the above, at the discretion of the Director of Purchasing where the delay or failure will significantly impair the value of the Contract to the Authority, the Director of Purchasing may:

a. Accept allocated performance or deliveries from the Contractor. The Contractor, however, hereby agrees to grant preferential treatment to the Authority with respect to Product subjected to allocation; and/or

b. Purchase from other sources (without recourse to and by the Contractor for the costs and expenses thereof) to replace all or part of the Products which are the subject of the delay, which purchases may be deducted from the Contract quantities without penalty or liability to the Authority; or

c. Terminate the Contract or the portion thereof which is subject to delays, and thereby discharge any unexecuted portion of the Contract or the relative part thereof.

In addition, the Director of Purchasing reserves the right, in his/her sole discretion, to make an equitable adjustment in the Contract terms and/or pricing should extreme and unforeseen volatility in the marketplace affect pricing or the availability of supply. "Extreme and unforeseen volatility in the marketplace" is defined as market circumstances which meet the following criteria: (i) the volatility is due to causes outside the control of Contractor; (ii) the volatility affects the marketplace or industry, not just the particular Contract source of supply; (iii) the effect on pricing or availability of supply is substantial; and (iv) the volatility so affects Contractor's performance that continued performance of the Contract would result in a substantial loss.

61. <u>CONTRACT BILLINGS</u> Contractor and the distributors/resellers designated by the Contractor, if any, shall provide complete and accurate billing invoices to the Authority in order to receive payment.

Prompt payment as required by law will be made by the Authority's designated payment office listed below:

New York State Thruway Authority
Office of Accounting and Disbursements
P.O. Box 189
Albany, New York 12201-0189

Submission of an invoice and payment thereof shall not preclude the Director of Purchasing from reimbursement or demanding a price adjustment in any case where the Product delivered is found to deviate from the terms and conditions of the Contract or where the billing was inaccurate.

Contractor shall provide, upon request of the Director of Purchasing, any and all information necessary to verify the accuracy of the billings. Such information shall be provided in the format requested by the Director of Purchasing and in a media commercially available from the Contractor. The Director of Purchasing may, as necessary, direct the Contractor to provide the information to the State Comptroller..

62. <u>INTEREST ON LATE PAYMENTS</u>

a. By the Authority The payment of interest on certain payments due and owed by the Authority may be made in accordance with Article 11-A of the State Finance Law (SFL §179-d et. Seq.) and Title 2 of the New York Code of Rules and Regulations, Part 18 (Implementation of Prompt Payment Legislation -2 NYCRR §18.1 et seq.).

b. <u>By Contractor</u> Should the Contractor be liable for any payments to the State hereunder, interest, late payment charges and collection fee charges will be determined and assessed pursuant to Section 18 of the State Finance Law.

63. REMEDIES FOR BREACH It is understood and agreed that all rights and remedies afforded below shall be in addition to all remedies or actions otherwise authorized or permitted by law:

a. Cover/Substitute Performance In the event of Contractor's material breach, the Director of Purchasing may, with or without formally bidding same: (i) Purchase from other sources; or (ii) If the Authority is unsuccessful after making reasonable attempts, under the circumstances then existing, to timely obtain acceptable service or acquire replacement Product of equal or comparable quality, the Authority may acquire acceptable replacement Product of lesser or greater quality.

Such purchases may, in the discretion of the Director of Purchasing, be deducted from the Contract quantity and payments due Contractor.

See "SET-OFF RIGHTS" in APPENDIX A

b. Withhold Payment In any case where a question of non-performance by Contractor arises, payment may be withheld in whole or in part at the discretion of the Director of Purchasing. Should the amount withheld be finally paid, a cash discount originally offered may be taken as if no delay in payment had occurred.

c. Bankruptcy In the event that the Contractor files a petition under the U.S. Bankruptcy Code during the term of this Centralized Contract, the Authority may make application to exercise its right to set-off against monies due the Debtor or, under the Doctrine of Recoupment, credit the Authority the amounts owed by the Contractor arising out of the same transactions.

d. Reimbursement of Costs Incurred The Contractor agrees to reimburse the Authority promptly for any and all additional costs and expenses incurred for acquiring acceptable services, and/or replacement Product. Should the cost of cover be less than the Contract price, the Contractor shall have no claim to the difference. The Contractor covenants and agrees that in the event suit is successfully prosecuted for any default on the part of the Contractor, all costs and expenses expended or incurred by the Authority in connection therewith, including reasonable attorney's fees, shall be paid by the Contractor.

Where the Contractor fails to timely deliver pursuant to the guaranteed delivery terms of the Contract, the Authority may rent substitute equipment temporarily. Any sums expended for such rental shall, upon demand, be reimbursed to the Authority promptly by the Contractor or deducted by the Authority from payments due or to become due the Contractor on the same or another transaction.

e. Deduction/Credit Sums due as a result of these remedies may be deducted or offset by the Authority from payments due, or to become due, the Contractor on the same or another transaction. If no deduction or only a partial deduction is made in such fashion the Contractor shall pay to the Authority the amount of such claim or portion of the claim still outstanding, on demand. The Authority reserves the right to determine the disposition of any rebates, settlements, restitution, liquidated damages, etc., which arise from the administration of the Contract.

64. ASSIGNMENT OF CLAIM Contractor hereby assigns to the State any and all its claims for overcharges associated with this Contract which may arise under the antitrust laws of the United States, 15 USC Section 1, et. seq. and the antitrust laws of the State of New York, General Business Law Section 340, et. seq.

65. TOXIC SUBSTANCES Each Contractor furnishing a toxic substance as defined by Section 875 of the Labor Law, shall provide the Authority with not less than two copies of a material safety data sheet, which sheet shall include for each such substance the information outlined in Section 876 of the Labor Law.

Before any chemical product is used or applied on or in any building, a copy of the product label and Material Safety Data Sheet must be provided to and approved by the Authority's representative.

66. INDEPENDENT CONTRACTOR It is understood and agreed that the legal status of the Contractor, its agents, officers and employees under this Contract is that of an independent Contractor, and in no manner shall they be deemed employees of the Authority, and therefore are not entitled to any of the benefits associated with such employment. The Contractor agrees, during the term of this Contract, to maintain at Contractor's expense those benefits to which its employees would otherwise be entitled by law, including health benefits, and all necessary insurance for its employees, including worker's compensation, disability and unemployment insurance, and to provide the Authority with certification of such insurance upon request. The Contractor remains responsible for all applicable federal, state and local taxes, and all FICA contributions.

67. SECURITY Contractor warrants, covenants and represents that it will comply fully with all security procedures of the Authority in performance of the Contract including but not limited to physical, facility, documentary and cyber security rules, procedures and protocols.

68. COOPERATION WITH THIRD PARTIES The Contractor shall be responsible for fully cooperating with any third party, including but not limited to other Contractors or Subcontractors of the Authority, as necessary to ensure delivery of Product or coordination of performance of services.

69. CONTRACT TERM - RENEWAL In addition to any stated renewal periods in the Contract, any Contract or unit portion thereof let by the Director of Purchasing may be extended by the Director of Purchasing for an additional period(s) of up to one year with the written concurrence of the Contractor and Comptroller. Such extension may be exercised on a month to month basis or in other stated periods of time during the one year extension.

70. ADDITIONAL WARRANTIES Where Contractor, product manufacturer or service provider generally offers additional or more advantageous warranties than set forth below, Contractor shall offer or pass through any such warranties to the Authority. Contractor hereby warrants and represents:

a. Product Performance Contractor warrants and represents that Products delivered pursuant to this Contract conform to the manufacturer's specifications, performance standards and documentation, and the documentation fully describes the proper procedure for using the Products.

b. Title and Ownership Warranty Contractor warrants, represents and conveys (i) full ownership, clear title free of all liens, or (ii) the right to transfer or deliver perpetual license rights to any Products transferred to the Authority under this Contract. Contractor shall be solely liable for any costs of acquisition associated therewith. Contractor fully indemnifies the Authority for any loss, damages or actions arising from a breach of said warranty without limitation.

c. Contractor Compliance Contractor represents and warrants to pay, at its sole expense, for all applicable permits, licenses, tariffs, tolls

and fees to give all notices and comply with all laws, ordinances, rules and regulations of any governmental entity in conjunction with the performance of obligations under the Contract. Prior to award and during the Contract term and any renewals thereof, Contractor must establish to the satisfaction of the Director of Purchasing that it meets or exceeds all requirements of the Bid/Contract and any applicable laws, including but not limited to, permits, insurance coverage, licensing, proof of coverage for worker's compensation, and shall provide such proof as required by the Director of Purchasing. Failure to do so may constitute grounds for the Director of Purchasing to cancel or suspend this Contract, in whole or in part, or to take any other action deemed necessary by the Director of Purchasing.

d. Product Warranty Unless recycled or recovered materials are available in accordance with the "Recycled or Recovered Materials" clause, Product offered shall be standard new equipment, current model or most recent release of regular stock product with all parts regularly used with the type of equipment offered; and no attachment or part has been substituted or applied contrary to the manufacturer's recommendations and standard practice.

Contractor further warrants and represents that components or deliverables specified and furnished by or through Contractor shall individually, and where specified and furnished as a system, be substantially uninterrupted or error-free in operation and guaranteed against faulty material and workmanship for the warranty period, or for a minimum of one (1) year from the date of acceptance, whichever is longer ("Project warranty period"). During the Project warranty period, defects in the materials or workmanship of components or deliverables specified and furnished by or through Contractor shall be repaired or replaced by Contractor at no cost or expense to the Authority. Contractor shall extend the Project warranty period for individual component(s), or for the System as a whole, as applicable, by the cumulative period(s) of time, after notification, during which an individual component or the System requires servicing or replacement (down time) or is in the possession of the Contractor, its agents, officers, Subcontractors, distributors, resellers or employees ("extended warranty").

Where Contractor, the Independent Software Vendor "ISV," or other third party manufacturer markets any Project Deliverable delivered by or through Contractor with a standard commercial warranty, such standard warranty shall be in addition to, and not relieve the Contractor from, Contractor's warranty obligations during the project warranty and extended warranty period(s). Where such standard commercial warranty covers all or some of the Project warranty or extended warranty period(s), Contractor shall be responsible for the coordination during the Project warranty or extended warranty period(s) with ISV or other third party manufacturer(s) for warranty repair or replacement of ISV or other third party manufacturer's Product.

Where Contractor, ISV or other third party manufacturer markets any Project Deliverable with a standard commercial warranty which goes beyond the Project warranty or extended warranty period(s), Contractor shall notify the Authority and pass through the manufacturer's standard commercial warranty to the Authority at no additional charge; provided, however, that Contractor shall not be responsible for coordinating services under the third party extended warranty after expiration of the Project warranty and extended warranty period(s).

e. Replacement Parts Warranty If during the regular or extended warranty period's faults develop, the Contractor shall promptly repair or, upon demand, replace the defective unit or component part affected. All costs for labor and material and transportation incurred to repair or replace defective Product during the warranty period shall be borne solely by the Contractor, and the Authority shall in no event be liable or responsible therefor.

Any part of component replaced by the Contractor under the Contract warranty shall be replaced at no cost to the Authority and guaranteed for the greater of: a) the warranty period under paragraph (d) above; or b) if a separate warranty for that part or component is generally offered by the manufacturer, the standard commercial warranty period offered by the manufacturer for the individual part or component.

f. Virus Warranty The Contractor represents and warrants that Licensed Software contains no known viruses. Contractor is not responsible for viruses introduced at Licensee's site.

g. Date/Time Warranty Contractor warrants that Product(s) furnished pursuant to this Contract shall, when used in accordance with the Product documentation, be able to accurately process date/time data (including, but not limited to, calculating, comparing, and sequencing) transitions, including leap year calculations. Where a Contractor proposes or an acquisition requires that specific Products must perform as a package or system, this warranty shall apply to the Products as a system.

Where Contractor is providing ongoing services, including but not limited to: i) consulting, integration, code or data conversion, ii) maintenance or support services, iii) data entry or processing, or iv) contract administration services (e.g., billing, invoicing, claim processing), Contractor warrants that services shall be provided in an accurate and timely manner without interruption, failure or error due to the inaccuracy of Contractor's business operations in processing date/time data (including, but not limited to, calculating, comparing, and sequencing) various date/time transitions, including leap year calculations. Contractor shall be responsible for damages resulting from any delays, errors or untimely performance resulting therefrom, including but not limited to the failure or untimely performance of such services.

This Date/Time Warranty shall survive beyond termination or expiration of this contract through: a) ninety (90) days or b) the Contractor's or Product manufacturer/developer's stated date/time warranty term, whichever is longer. Nothing in this warranty statement shall be construed to limit any rights or remedies otherwise available under this Contract for breach of warranty.

h. Workmanship Warranty Contractor warrants that all components or deliverables specified and furnished by or through Contractor under the Bid Specifications/Contract meet the completion criteria set forth in the Bid Specifications/Contract and any subsequent statement(s) of work, and that services will be provided in a workmanlike manner in accordance with industry standards.

i. Survival of Warranties All warranties contained in this Contract shall survive the termination of this Contract.

71. LEGAL COMPLIANCE Contractor represents and warrants that it shall secure all notices and comply with all laws, ordinances, rules and regulations of any governmental entity in conjunction with the performance of obligations under the Contract. Prior to award and during the Contract term and any renewals thereof, Contractor must establish to the satisfaction of the Director of Purchasing that it meets or exceeds all requirements of the Bid and Contract and any applicable laws, including but not limited to, permits, licensing, and shall provide such proof as required by the Director of Purchasing. Failure to comply or failure to provide proof may constitute grounds for the Director of Purchasing to cancel or suspend the Contract, in whole or in part, or to take any other action deemed necessary by the Director of Purchasing. Contractor also agrees to disclose information and

provide affirmations and certifications to comply with Sections 139-j and 139-k of the State Finance Law.

72. INDEMNIFICATION Contractor shall be fully liable for the actions of its agents, employees, partners or Subcontractors and shall fully indemnify and save harmless the Authority from suits, actions, damages and costs of every name and description relating to personal injury and damage to real or personal tangible property caused by any intentional act or negligence of Contractor, its agents, employees, partners or Subcontractors, without limitation; provided, however, that the Contractor shall not indemnify for that portion of any claim, loss or damage arising hereunder due to the negligent act or failure to act of the Authority.

73. INDEMNIFICATION RELATING TO THIRD PARTY RIGHTS The Contractor will also indemnify and hold the Authority harmless from and against any and all damages, expenses (including reasonable attorneys' fees), claims, judgments, liabilities and costs that may be finally assessed against the Authority in any action for infringement of a United States Letter Patent, or of any copyright, trademark, trade secret or other third party proprietary right except to the extent such claims arise from the Authority gross negligence or willful misconduct, provided that the Authority shall give Contractor: (i) prompt written notice of any action, claim or threat of infringement suit, or other suit, (ii) the opportunity to take over, settle or defend such action, claim or suit at Contractor's sole expense, and (iii) assistance in the defense of any such action at the expense of Contractor.

If usage shall be enjoined for any reason or if Contractor believes that it may be enjoined, Contractor shall have the right, at its own expense and sole discretion to take action in the following order of precedence: (i) to procure for the Authority the right to continue Usage (ii) to modify the service or Product so that Usage becomes non-infringing, and is of at least equal quality and performance; or (iii) to replace said service or Product or part(s) thereof, as applicable, with non-infringing service or Product of at least equal quality and performance. If the above remedies are not available, the parties shall terminate the Contract, in whole or in part as necessary and applicable, provided the Authority is given a refund for any amounts paid for the period during which Usage was not feasible.

The foregoing provisions as to protection from third party rights shall not apply to any infringement occasioned by modification by the Authority of any Product without Contractor's approval.

In the event that an action at law or in equity is commenced against the Authority arising out of a claim that the Authority use of the service or Product under the Contract infringes any patent, copyright or proprietary right, and Contractor is of the opinion that the allegations in such action in whole or in part are not covered by the indemnification and defense provisions set forth in the Contract, Contractor shall immediately notify the Authority and the Office of the Attorney General in writing and shall specify to what extent Contractor believes it is obligated to defend and indemnify under the terms and conditions of the Contract. Contractor shall in such event protect the interests of the Authority and secure a continuance to permit the Authority to appear and defend its interests in cooperation with Contractor, as is appropriate, including any jurisdictional defenses the Authority may have. This constitutes the Authority's sole and exclusive remedy for patent infringement, or for infringement of any other third party proprietary right.

74. LIMITATION OF LIABILITY Except as otherwise set forth in the Indemnification Paragraphs above, the limit of liability shall be as follows:

a. Contractor's liability for any claim, loss or liability arising out of, or connected with the Products and services provided, and whether based upon default, or other liability such as breach of contract, warranty, negligence, misrepresentation or otherwise, shall in no case exceed direct damages in: (i) an amount equal to two (2) times the charges specified in the Purchase Order for the Products and services, or parts thereof forming the basis of the Authority's claim, (said amount not to exceed a total of twelve (12) months charges payable under the applicable Purchase Order) or (ii) one million dollars ($1,000,000), whichever is greater.

b. The Authority may retain such monies from any amount due Contractor as may be necessary to satisfy any claim for damages, costs and the like asserted against the Authority unless Contractor at the time of the presentation of claim shall demonstrate to the Authority's satisfaction that sufficient monies are set aside by the Contractor in the form of a bond or through insurance coverage to cover associated damages and other costs.

c. Notwithstanding the above, neither the Contractor nor the Authority shall be liable for any consequential, indirect or special damages of any kind which may result directly or indirectly from such performance, including, without limitation, damages resulting from loss of use or loss of profit by the Authority, the Contractor, or by others.

75. INSURANCE Contractor shall secure and maintain insurance coverage as specified in the Bid Documents and shall promptly provide documentation of specified coverages to the Authority. If specified, the Contractor may be required to add the Authority as an additional insured.

THE FOLLOWING CLAUSES PERTAIN TO TECHNOLOGY & NEGOTIATED CONTRACTS

76. SOFTWARE LICENSE GRANT Where Product is acquired on a licensed basis the following shall constitute the license grant:

a. License Scope Licensee is granted a non-exclusive, perpetual license to use, execute, reproduce, display, perform, or merge the Product within its business enterprise in the United States up to the maximum licensed capacity stated on the Purchase Order. Product may be accessed, used, executed, reproduced, displayed or performed up to the capacity measured by the applicable licensing unit stated on the Purchase Order (i.e., payroll size, number of employees, CPU, MIPS, MSU, concurrent user, workstation). Licensee shall have the right to use and distribute modifications or customizations of the Product to and for use by any Authorized Users otherwise licensed to use the Product, provided that any modifications, however extensive, shall not diminish Licensor's proprietary title or interest. No license, right or interest in any trademark, trade name, or service mark is granted hereunder.

b. License Term The license term shall commence upon the License Effective Date, provided, however, that where an acceptance or trial period applies to the Product, the License Term shall be extended by the time period for testing, acceptance or trial.

c. Licensed Documentation If commercially available, Licensee shall have the option to require the Contractor to deliver, at Contractor's expense: (i) one (1) hard copy and one (1) master electronic copy of the Documentation in a mutually agreeable format; (ii) based on hard copy instructions for access by downloading from the Internet (iii) hard copies of the Product Documentation by type of license in the following amounts, unless otherwise mutually agreed:

- Individual/Named User License - one (1) copy per License
- Concurrent Users - 10 copies per site
- Processing Capacity - 10 copies per site

Software media must be in a format specified by the Authorized User, without requiring any type of conversion.

Contractor hereby grants to Licensee a perpetual license right to make, reproduce (including downloading electronic copies of the Product) and distribute, either electronically or otherwise, copies of Product Documentation as necessary to enjoy full use of the Product in accordance with the terms of license.

d. Product Technical Support & Maintenance Licensee shall have the option of electing the Product technical support and maintenance ("maintenance") set forth in the Contract by giving written notice to Contractor any time during the Contract term. Maintenance term(s) and any renewal(s) thereof are independent of the expiration of the Contract term and will not automatically renew.

Maintenance shall include, at a minimum, (i) the provision of error corrections, updates, revisions, fixes, upgrade and new releases to Licensee, and (ii) Help Desk assistance with locally accessible "800" or toll free, local telephone service, or alternatively on-line Help Desk accessibility. Contractor shall maintain the Products so as to provide Licensee with the ability to utilize the Products in accordance with the Product documentation without significant functional downtime to its ongoing business operations during the maintenance term.

Authorized User shall not be required to purchase maintenance for use of Product, and may discontinue maintenance at the end of any current maintenance term upon notice to Contractor. In the event that Authorized User does not initially acquire or discontinues maintenance of licensed Product, it may, at any time thereafter, reinstate maintenance for Product without any additional penalties or other charges, by paying Contractor the amount which would have been due under the Contract for the period of time that such maintenance had lapsed, at then current NYS net maintenance rates.

e. Permitted License Transfers As Licensee's business operations may be altered, expanded or diminished, licenses granted hereunder may be transferred or combined for use at an alternative or consolidated site not originally specified in the license, including transfers between the Canal Corporation and the Authority ("permitted license transfers"). Licensee(s) do not have to obtain the approval of Contractor for permitted license transfers, but must give thirty (30) days prior written notice to Contractor of such move(s) and certify in writing that the Product is not in use at the prior site. There shall be no additional license or other transfer fees due Contractor, provided that: i) the maximum capacity of the consolidated machine is equal to the combined individual license capacity of all licenses running at the consolidated or transferred site (e.g., named users, seats, or MIPS); or ii) if the maximum capacity of the consolidated machine is greater than the individual license capacity being transferred, a logical or physical partition or other means of restricting access will be maintained within the computer system so as to restrict use and access to the Product to that unit of licensed capacity solely dedicated to beneficial use for Licensee. In the event that the maximum capacity of the consolidated machine is greater than the combined individual license capacity of all licenses running at the consolidated or transferred site, and a logical or physical partition or other means of restricting use is not available, the fees due Contractor shall not exceed the fees otherwise payable for a single license for the upgrade capacity.

f. Restricted Use By Outsourcers / Facilities Management, Service Bureaus / or Other Third Parties Outsourcers, facilities management or service bureaus retained by Licensee shall have the right to use the Product to maintain Licensee's business operations, including data processing, for the time period that they are engaged in such activities, provided that: 1) Licensee gives notice to Contractor of such party, site of intended use of the Product, and means of access; and 2) such party has executed, or agrees to execute, the Product manufacturer's standard nondisclosure or restricted use agreement which executed agreement shall be accepted by the Contractor ("Non-Disclosure Agreement"); and 3) if such party is engaged in the business of facility management, outsourcing, service bureau or other services, such third party will maintain a logical or physical partition within its computer system so as to restrict use and access to the program to that portion solely dedicated to beneficial use for Licensee. In no event shall Licensee assume any liability for third party's compliance with the terms of the Non-Disclosure Agreement, nor shall the Non-Disclosure Agreement create or impose any liabilities on the Authority or Licensee.

Any third party with whom a Licensee has a relationship for a state function or business operation, shall have the temporary right to use Product (e.g., JAVA Applets), provided that such use shall be limited to the time period during which the third party is using the Product for the function or business activity.

g. Archival Back-Up and Disaster Recovery Licensee may use and copy the Product and related Documentation in connection with: i) reproducing a reasonable number of copies of the Product for archival backup and disaster recovery procedures in the event of destruction or corruption of the Product or disasters or emergencies which require Licensee to restore backup(s) or to initiate disaster recovery procedures for its platform or operating systems; ii) reproducing a reasonable number of copies of the Product and related Documentation for cold site storage. "Cold Site" storage shall be defined as a restorable back-up copy of the Product not to be installed until and after the declaration by the Licensee of a disaster; iii) reproducing a back-up copy of the Product to run for a reasonable period of time in conjunction with a documented consolidation or transfer otherwise allowed herein. "Disaster Recovery" shall be defined as the installation and storage of Product in ready-to-execute, back-up computer systems prior to disaster or breakdown which is not used for active production or development.

h. Confidentiality Restrictions The Product is a trade secret, copyrighted and proprietary product. Licensee and its employees will keep the Product strictly confidential, and Licensee will not disclose or otherwise distribute or reproduce any Product to anyone other than as authorized under the terms of Contract. Licensee will not remove or destroy any proprietary markings of Contractor.

i. Restricted Use by Licensee Except as expressly authorized by the terms of license, Licensee shall not:

(i) Copy the Product;

(ii) Cause or permit reverse compilation or reverse assembly of all or any portion of the Product;

(iii) Export the Licensed Software in violation of any U.S. Department of Commerce export administration regulations.

77. PRODUCT ACCEPTANCE Unless otherwise provided by mutual agreement of the Authority and the Contractor, the Authority shall have thirty (30) days from the date of delivery to accept hardware products and sixty (60) days from the date of delivery to accept all other Product. Where the Contractor is responsible for installation, acceptance shall be from completion of installation. Failure to provide notice of acceptance or rejection or a deficiency statement to the

Contractor by the end of the period provided for under this clause constitutes acceptance by the Authority as of the expiration of that period. The License Term shall be extended by the time periods allowed for trial use, testing and acceptance unless the Authority agrees to accept the Product at completion of trial use.

Unless otherwise provided by mutual agreement of the Authority and the Contractor, the Authority shall have the option to run testing on the Product prior to acceptance, such tests and data sets to be specified by User. Where using its own data or tests, Authority must have the tests or representative set of data available upon delivery. This demonstration will take the form of a documented installation test, capable of observation by the Authority, and shall be made part of the Contractor's standard documentation. The test data shall remain accessible to the Authority after completion of the test.

In the event that the documented installation test cannot be completed successfully within the specified acceptance period, and the Contractor or Product is responsible for the delay, the Authority shall have the option to cancel the order in whole or in part, or to extend the testing period for an additional thirty (30) day increment. The Authority shall notify Contractor of acceptance upon successful completion of the documented installation test. Such cancellation shall not give rise to any cause of action against the Authority for damages, loss of profits, expenses, or other remuneration of any kind.

If the Authority elects to provide a deficiency statement specifying how the Product fails to meet the specifications within the testing period, Contractor shall have thirty (30) days to correct the deficiency, and the Authority shall have an additional sixty (60) days to evaluate the Product as provided herein. If the Product does not meet the specifications at the end of the extended testing period, the Authority upon prior written notice to Contractor, may then reject the Product and return all defective Product to Contractor, and Contractor shall refund any monies paid by the Authority to Contractor therefor. Costs and liabilities associated with a failure of the Product to perform in accordance with the functionality tests or product specifications during the acceptance period shall be borne fully by Contractor to the extent that said costs or liabilities shall not have been caused by negligent or willful acts or omissions of the Authority agents or employees. Said costs shall be limited to the amounts set forth in the Limitation of Liability Clause for any liability for costs incurred at the direction or recommendation of Contractor.

78. <u>AUDIT OF LICENSED PRODUCT USAGE</u> Contractor shall have the right to periodically audit, no more than annually, at Contractor's expense, use of licensed Product at any site where a copy of the Product resides provided that: (i) Contractor gives Licensee(s) at least thirty (30) days advance written notice, (ii) such audit is conducted during such party's normal business hours, (iii) the audit is conducted by an independent auditor chosen on mutual agreement of the parties. Contractor shall recommend a minimum of three (3) auditing/accounting firms from which the Licensee will select one (1). In no case shall the Business Software Alliance (BSA), Software Publishers Association (SPA), Software and Industry Information Association (SIIA) or Federation Against Software Theft (FAST) be used directly or indirectly to conduct audits, or be recommended by Contractor; (iv) Contractor and Licensee are each entitled to designate a representative who shall be entitled to participate, and who shall mutually agree on audit format, and simultaneously review all information obtained by the audit. Such representatives also shall be entitled to copies of all reports, data or information obtained from the audit; and (v) if the audit shows that such party is not in compliance, Licensee shall be required to purchase additional licenses or capacities necessary to bring it into compliance and shall pay for the unlicensed capacity at the NYS Net Price in effect at time of audit, or if none, then at the Contractor's U.S. Commercial list price. Once such additional licenses or capacities are purchased, Licensee shall be deemed to have been in compliance retroactively, and Licensee shall have no further liability of any kind for the unauthorized use of the software.

79. <u>OWNERSHIP/TITLE TO PROJECT DELIVERABLES</u>

a. <u>Definitions</u>

(i) For purposes of this paragraph, "Products." A deliverable furnished under this Contract by or through Contractor, including existing and custom Products, including, but not limited to: a) components of the hardware environment, b) printed materials (including but not limited to training manuals, system and user documentation, reports, drawings), whether printed in hard copy or maintained on diskette, CD, DVD or other electronic media c) third party software, d) modifications, customizations, custom programs, program listings, programming tools, data, modules, components, and e) any properties embodied therein, whether in tangible or intangible form (including but not limited to utilities, interfaces, templates, subroutines, algorithms, formulas, source code, object code).

(ii) For purposes of this paragraph, "Existing Products." Tangible Products and intangible licensed Products that exist prior to the commencement of work under the Contract. Contractor bears the burden of proving that a particular product was in existence prior to the commencement of the Project.

(iii) For purposes of this paragraph, "Custom Products." Products, preliminary, final or otherwise, which are created or developed by Contractor, its Subcontractors, partners, employees or agents for Authorized User under the Contract.

b. <u>Title to Project Deliverables</u> Contractor acknowledges that it is commissioned by the Authorized User to perform the services detailed in the Purchase Order. Unless otherwise specified in writing in the Bid or Purchase Order, the Authority shall have ownership and license rights as follows:

(i) Existing Products:

1. Hardware - Title and ownership of Existing Hardware Product shall pass to the Authority upon Acceptance.

2. Software - Title and ownership to Existing Software Product(s) delivered by Contractor under the Contract that is normally commercially distributed on a license basis by the Contractor or other independent software vendor proprietary owner ("Existing Licensed Product"), whether or not embedded in, delivered or operating in conjunction with hardware or Custom Products, shall remain with Contractor or the proprietary owner of other independent software vendor(s) (ISV). Effective upon acceptance, such Product shall be licensed to the Authority in accordance with the Contractor or ISV owner's standard license agreement, provided, however, that such standard license, must, at a minimum: (a) grant the Authority a non-exclusive, perpetual license to use, execute, reproduce, display, perform, adapt (unless Contractor advises the Authority as part of Contractor's proposal that adaptation will violate existing agreements or statutes and Contractor demonstrates such to the Authority satisfaction) and distribute Existing Licensed Product to the Authority up to the license capacity stated in the Purchase Order or work order with all license rights necessary to fully effect the general business purpose(s) stated in the Bid or Authority Purchase Order or work order, including the financing assignment rights set forth in paragraph (c) below. Where these rights are not otherwise covered by the ISV's owner's standard license agreement, the Contractor shall be responsible for obtaining these rights at its sole cost and expense. The Authority shall reproduce all copyright notices and any other legend of ownership on any copies authorized under this paragraph.

(**ii.) Custom Products**: Effective upon creation of Custom Products, Contractor hereby conveys, assigns and transfers to Authority the sole and exclusive rights, title and interest in Custom Product(s), whether preliminary, final or otherwise, including all trademark and copyrights. Contractor hereby agrees to take all necessary and appropriate steps to ensure that the Custom Products are protected against unauthorized copying, reproduction and marketing by or through Contractor, its agents, employees, or Subcontractors. Nothing herein shall preclude the Contractor from otherwise using the related or underlying general knowledge, skills, ideas, concepts, techniques and experience developed under a Purchase Order, project definition or work order in the course of Contractor's business. Authority may, by providing written notice thereof to the Contractor, elect in the alternative to take a non-exclusive perpetual license to Custom Products in lieu of Authority taking exclusive ownership and title to such Products. In such case, Licensee on behalf of the Authority shall be granted a non-exclusive perpetual license to use, execute, reproduce, display, perform, adapt and distribute Custom Product as necessary to fully effect the general business purpose(s) as stated in paragraph (b)(i)(2), above.

c. Transfers or Assignments to a Third Party Financing Agent It is understood and agreed by the parties that a condition precedent to the consummation of the purchase (s) under the Contract may be the obtaining of acceptable third party financing by the Authorized User. The Authority shall make the sole determination of the acceptability of any financing proposal. The Authority will make all reasonable efforts to obtain such financing, but makes no representation that such financing has been obtained as of the date of Bid receipt. Where financing is used, Authority may assign or transfer its rights in Licensed Products (existing or custom) to a third party financing entity or trustee ("Trustee") as collateral where required by the terms of the financing agreement. Trustee's sole rights with respect to transferability or use of Licensed Products shall be to exclusively sublicense to Authority all of its Licensee's rights under the terms and conditions of the License Agreement; provided, further, however, in the event of any termination or expiration of such sublicense by reason of payment in full, all of Trustee's rights in such Licensed Product shall terminate immediately and the Authority's prior rights to such Existing Licensed Product shall be revived.

d. Sale or License of Custom Products Involving Tax-Exempt Financing (i.e., Certificates of Participation - COPS) The Authority's sale or other transfer of Custom Products which were acquired by the Authority using third party, tax-exempt financing may not occur until such Custom Products are, or become, useable. In the event that the Contractor wishes to obtain ownership rights to Custom Product(s), the sale or other transfer shall be at fair market value determined at the time of such sale or other transfer, and must be pursuant to a separate written agreement in a form acceptable to the Authority which complies with the terms of this paragraph.

e. Contractor's Obligation with Regard to ISV (Third Party) Product Where Contractor furnishes Existing Licensed Product(s) as a Project Deliverable, and sufficient rights necessary to effect the purposes of this section are not otherwise provided in the Contractor or ISV's standard license agreement, Contractor shall be responsible for obtaining from the ISV third party proprietary owner/developer the rights set forth herein to the benefit of the Authority at Contractor's sole cost and expense.

80. PROOF OF LICENSE The Contractor must provide to each Licensee who places a Purchase Order either: (i) the Product developer's certified License Confirmation Certificates in the name of such Licensee; or (ii) a written confirmation from the Proprietary owner accepting Product invoice as proof of license. Contractor shall submit a sample certificate, or alternatively such written confirmation from the proprietary developer. Such certificates must be in a form acceptable to the Licensee.

81. PRODUCT VERSION Purchase Orders shall be deemed to reference Manufacturer's most recently released model or version of the Product at time of order, unless an earlier model or version is specifically requested in writing by the Authority and Contractor is willing to provide such version.

82. CHANGES TO PRODUCT OR SERVICE OFFERINGS

a. Product or Service Discontinuance Where Contractor is the Product Manufacturer/Developer, and Contractor publicly announces to all U.S. customers ("date of notice") that a Product is being withdrawn from the U.S. market or that maintenance service or technical support provided by Contractor ("withdrawn support") is no longer going to be offered, Contractor shall be required to: (i) notify the Authority in writing of the intended discontinuance; and (ii) continue to offer Product or withdrawn support upon the Contract terms previously offered for the greater of: a) the best terms offered by Contractor to any other customer, or b) not less than twelve (12) months from the date of notice; and (iii) at the Authority's option, provided that the Authority is under contract for maintenance on the date of notice, either: provide the Authority with a Product replacement or migration path with at least equivalent functionality at no additional charge to enable Authority to continue use and maintenance of the Product.

In the event that the Contractor is not the Product Manufacturer, Contractor shall be required to: (i) provide the notice required under the paragraph above, to the entities described within five (5) business days of Contractor receiving notice from the Product Manufacturer, and (ii) include in such notice the period of time from the date of notice that the Product Manufacturer will continue to provide Product or withdraw support.

The provisions of this subdivision (a) shall not apply or eliminate Contractor's obligations where withdrawn support is being provided by an independent Subcontractor. In the event that such Subcontractor ceases to provide service, Contractor shall be responsible for subcontracting such service, subject to state approval, to an alternate Subcontractor.

b. Product or Service Re-Bundling In the event that Contractor is the Product manufacturer and publicly announces to all U.S. customers ("date of notice") that a Product or maintenance or technical support offering is being re-bundled in a different manner from the structure or licensing model of the prior U.S. commercial offering, Contractor shall be required to: (i) notify the Authority in writing of the intended change; (ii) continue to provide Product or withdrawn support upon the same terms and conditions as previously offered on the then-current NYS Contract for the greater of: a) the best terms offered by Contractor to any other customer, or b) not less than twelve (12) months from the date of notice; and (iii) shall submit the proposed rebundling change to the Authority for approval prior to its becoming effective for the remainder of the Contract term. The provisions of this section do not apply if the Contractor is not the Product manufacturer.

83. NO HARDSTOP/PASSIVE LICENSE MONITORING Unless the Authority is otherwise specifically advised to the contrary in writing at the time of order and prior to purchase, Contractor hereby warrants and represents that the Product and all Upgrades do not and will not contain any computer code that would disable the Product or Upgrades or impair in any way its operation based on the elapsing of a period of time, exceeding an authorized number of copies,

advancement to a particular date or other numeral, or other similar self-destruct mechanisms (sometimes referred to as "time bombs," "time locks," or "drop dead" devices) or that would permit Contractor to access the Product to cause such disablement or impairment (sometimes referred to as a "trap door" device). Contractor agrees that in the event of a breach or alleged breach of this provision that the Authority shall not have an adequate remedy at law, including monetary damages, and that the Authority shall consequently be entitled to seek a temporary restraining order, injunction, or other form of equitable relief against the continuance of such breach, in addition to any and all remedies to which the Authority shall be entitled.

84. SOURCE CODE ESCROW FOR LICENSED PRODUCT If Source Code or Source Code escrow is offered by either Contractor or Product manufacturer or developer to any other commercial customers, Contractor shall either: (i) provide Licensee with the Source Code for the Product; or (ii) place the Source Code in a third party escrow arrangement with a designated escrow agent who shall be named and identified to the Authority, and who shall be directed to release the deposited Source Code in accordance with a standard escrow agreement acceptable to the Authority; or (iii) will certify to the Authority that the Product manufacturer/developer has named the Authority, acting by and through the Authorized User, and the Licensee, as a named beneficiary of an established escrow arrangement with its designated escrow agent who shall be named and identified to the Authority and Licensee, and who shall be directed to release the deposited Source Code in accordance with the terms of escrow. Source Code, as well as any corrections or enhancements to such source code, shall be updated for each new release of the Product in the same manner as provided above and such updating of escrow shall be certified to the Authority in writing. Contractor shall identify the escrow agent upon commencement of the Contract term and shall certify annually that the escrow remains in effect in compliance with the terms of this paragraph.

The Authority may release the Source Code to Licensees under this Contract who have licensed Product or obtained services, who may use such copy of the Source Code to maintain the Product.

FOR NEGOTIATED CONTRACTS THE FOLLOWING CLAUSES ARE RESERVED BECAUSE BIDDING DOES NOT APPLY:

Clauses: 7, 8, 9, 10, 11, 12, 13, 16, 15, 21, 25, 26, 28, 29, 30, 31, 32, 33, 36, 49, 50, 52, 54 and 37

INDEX

	Paragraph No.
A	
Additional Warranties	70
Advertising Results	21
Appendix A	3
Applicability	1
Assignment of Claim	64
Audit of Licensed Product Usage	78
Authentication of Facsimile Bids	11
B	
Bid Contents	13
Bid Evaluation	30
Bid Opening	8
Bid Submission	9
C	
Changes to Product or Service Offerings	82
Clarification/Revisions	32
Confidential/Trade Secret Materials	15
Conflict of Terms	5
Conditional Bid	31
Contract Billings	61
Contract Creation/Execution	39
Contract Term - Renewal	69
Cooperation with Third Parties	68
D	
Definitions	6
Disqualification for Past Performance	36
Drawings	26
E	
Emergency Contracts	43
Employees/Subcontractors/Agents	55
Equivalent or Identical Bids	34
Estimated/Specific Quantity Contracts	42
Ethics Compliance	4
Expenses Prior to Contract Execution	20
Extraneous Terms	14
F	
Facsimile Submissions	10
Freedom of Information Law	17
G	
Governing Law	2
I	
Indemnification	72
Indemnification Relating to Third Party Rights	73
Independent Contractor	66
Installation	52
Insurance	75
Interest on Late Payments	62
International Bidding	7
L	
Late Bids	12
Legal Compliance	71
Limitation of Liability	74

	Paragraph No.
M	
Modification of Contract Terms	40
N	
No Hardstop/Passive License Monitoring	83
O	
On-Site Storage	54
Ownership/Title to Project Deliverables	79
P	
Participation in Centralized Contracts	39
Performance and Responsibility Qualifications	35
Performance/Bid Bond	57
Prevailing Wage Rates Public Works & Building Services Contracts	18
Pricing	25
Procurement Card	28
Product Acceptance	77
Product Delivery	45
Product References	22
Product Substitution	50
Product Version	81
Products Manufactured in Public Institutions	24
Prompt Payment Discounts	33
Proof of License	80
Purchase Orders	44
Q	
Quantity Changes Prior to Award	37
R	
Rejected Product	51
Release of Bid Evaluation Materials	16
Re-Weighing Product	49
Remanufactured, Recycled, Recyclable or Recovered Materials	23
Remedies for Breach	63
Repaired or Replaced Product/Components	53
S	
Samples	29
Savings/Force Majeure	60
Scope Changes	41
Security	67
Site Inspection	27
Shipping/Receipt of Product	47
Software License Grant	76
Source Code Escrow for Licensed Product	84
Subcontractors and Suppliers	56
Suspension of Work	58
T	
Taxes	19
Termination	59
Timeframe for Offers	38
Title and Risk of Loss	48
Toxic Substances	65
W	
Weekend and Holiday Deliveries	46

APPENDIX A

Standard Clauses For New York State Thruway Authority Contracts

The parties to the attached contract, license, lease, amendment or other agreement of any kind ("the contract" or "this contract") agree to be bound by the following clauses which are hereby made a part of the contract (the word "Contractor" herein refers to any party and its agents, successors and assigns, other than the Thruway Authority ("Authority"), whether a contractor, licensor, licensee, lessor, lessee or any other party):

1. **NON-ASSIGNMENT CLAUSE**. This contract may not be assigned by the Contractor nor may its right, title or interest therein be assigned, transferred, conveyed, subcontracted, sublet or otherwise disposed of without the previous consent, in writing, of the Authority and any attempts to assign the contract without the Authority's written consent are null and void.

2. **COMPTROLLER APPROVAL**. Unless otherwise provided by resolution of the Authority Board, if this contract involves the expenditure of funds in excess of $50,000, or if, by this contract, the Authority agrees to give something other than money when the value or reasonably estimated value of such consideration exceeds $25,000, this contract shall not be valid, effective or binding upon the Authority until it has been approved by the State Comptroller and filed in his office.

3. **WORKERS' COMPENSATION AND DISABILITY BENEFITS**. This contract shall be void and of no force and effect unless the Contractor shall provide and maintain coverage during the life of this contract for the benefit of such employees as are required to be covered by the provisions of the State Workers' Compensation Law. If employees will be working on, near or over navigable waters, a U.S. Longshore and Harbor Workers' Compensation Act endorsement must be included.

4. **NON-DISCRIMINATION REQUIREMENTS**. To the extent required by Article 15 of the State Executive Law (also known as the Human Rights Law) and all other State and Federal statutory and constitutional non-discrimination provisions, the Contractor will not discriminate against any employee or applicant for employment because of race, creed, color, sex (including gender identity or expression), national origin, sexual orientation, military status, age, disability, predisposing genetic characteristics, marital status or domestic violence victim status or because the individual has opposed any practices forbidden under the Human Rights Law or has filed a complaint, testified, or assisted in any proceeding under the Human Rights Law. Furthermore, in accordance with State Labor Law §220-e, if this is a contract for the construction, alteration or repair of any public building or public work or for the manufacture, sale or distribution of materials, equipment or supplies, and to the extent that this contract shall be performed within the State of New York, Contractor agrees that neither it nor its subcontractors shall by reason of race, creed, color, disability, sex or national origin: (a) discriminate in hiring against any New York State citizen who is qualified and available to perform the work; or (b) discriminate against or intimidate any employee hired for the performance of work under this contract. If this is a building service contract as defined in State Labor Law §230, then, in accordance with §239 thereof, the Contractor agrees that neither it nor its subcontractors shall, by reason of race, creed, color, national origin, age, sex or disability: (a) discriminate in hiring against any New York State citizen who is qualified and available to perform the work; or (b) discriminate against or intimidate any employee hired for the performance of work under this contract. The Contractor is subject to fines of $50 per person per day for any violation of State Labor Law §§220-e or 239 as well as possible termination of this contract and forfeiture of all moneys due hereunder for a second or subsequent violation.

5. **WAGE AND HOURS PROVISIONS**. If this is a public work contract covered by Article 8 of the State Labor Law or a building service contract covered by Article 9 thereof, neither the Contractor's employees nor the employees of its subcontractors may be required or permitted to work more than the number of hours or days stated in said statutes, except as otherwise provided in the State Labor Law and as set forth in prevailing wage and supplement schedules issued by the State Labor Department. Furthermore, the Contractor and its subcontractors must pay at least the prevailing wage rate and pay or provide the prevailing supplements, including the premium rates for overtime pay, as determined by the State Labor Department in accordance with the State Labor Law. Additionally, effective April 28, 2008, if this is a public work contract covered by Article 8 of the New York State Labor Law, the Contractor understands and agrees that the filing of payrolls in a manner consistent with subdivision 3-a of §220 of the New York State Labor Law shall be a condition precedent to payment by the Authority of any Authority approved sums due and owing for work done on the project.

6. **NON-COLLUSIVE BIDDING CERTIFICATION**. In accordance with State Public Authorities Law §2878, if this contract was awarded based upon the submission of bids, the Contractor warrants, under penalty of perjury, that its bid was arrived at independently and without collusion aimed at restricting competition. The Contractor further warrants that, at the time the Contractor submitted its bid, an authorized and responsible person executed and delivered to the Authority a non-collusive bidding certification on the Contractor's behalf.

7. **INTERNATIONAL BOYCOTT PROHIBITION**. In accordance with State Labor Law §220-f, if this contract

exceeds $5,000, the Contractor agrees, as a material condition of this contract, that neither the Contractor nor any substantially owned or affiliated person, firm, partnership, or corporation has participated, is participating, or shall participate in an international boycott in violation of the Federal Export Administration Act of 1979 (50 USC App. §§2401 et seq.) or regulations thereunder. If such Contractor, or any of the aforesaid affiliates of the Contractor, is convicted or is otherwise found to have violated said laws or regulations upon the final determination of the United States Commerce Department or any other appropriate agency of the United States subsequent to the contract's execution, such contract, amendment or modification thereto shall be rendered forfeit and void. The Contractor shall so notify the Authority within five (5) business days of such conviction, determination or disposition of appeal.

8. **SET-OFF RIGHTS**. The Authority shall have rights of set-off. These rights shall include, but not be limited to, the Authority's option to withhold for the purposes of set-off any moneys due to the Contractor under this contract up to any amounts due and owing by the Contractor to the Authority with regard to this contract, or any other contract with the Authority, including any contract for a term commencing prior to the term of this contract, plus any amounts due and owing to the Authority for any other reason including, without limitation, monetary penalties, adjustments, fees, or claims for damages by the Authority and third parties in connection therewith.

9. **RECORDS**. The Contractor shall establish and maintain complete and accurate books, records, documents, accounts and other evidence directly pertinent to performance under this contract (collectively, "Records") for a period of six (6) years (or any other longer period required by law) following final payment or the termination of this contract, whichever is later, and any extensions thereto. The Authority, State Comptroller, State Attorney General and any other person or entity authorized to conduct an examination shall have access to the Records during normal business hours at an office of the Contractor within New York State, or, if no such office is available, at a mutually agreeable and reasonable venue within the State, during the contract term, any extensions thereof and said six (6) year period thereafter, for purposes of inspection, auditing and copying. As used in this clause, "termination of this contract" shall mean the later of completion of the work of the contract or the end date of the term stated in the contract. The Authority will take reasonable steps to protect from public disclosure those Records which are exempt from disclosure under State Public Officers Law §87 ("Statute") provided that: (i) the Contractor shall timely inform an appropriate Authority official, in writing, that said records should not be disclosed; (ii) said records shall be sufficiently identified; and (iii) designation of said records as exempt under the Statute is reasonable. Nothing contained herein shall diminish, or in any way adversely affect, the Authority's right to discovery in any pending or future litigation.

10. **IDENTIFYING INFORMATION AND PRIVACY NOTIFICATION**. All invoices or New York State standard vouchers submitted for payment for the sale of goods or services or the lease of real or personal property to the Authority must include the payee's identification number, i.e., the seller's or lessor's identification number. The number is either the payee's Federal employer identification number or Federal social security number, or both such numbers when the payee has both such numbers. Failure to include this number or numbers may delay payment. Where the payee does not have such number or numbers, the payee, on its invoice or New York State standard voucher, must give the reason or reasons why the payee does not have such number or numbers.

The authority to request the above personal information from a seller of goods or services or a lessor of real or personal property, and the authority to maintain such information, is found in State Tax Law §5. Disclosure of this information by the seller or lessor to the Authority is mandatory. The principal purpose for which the information is collected is to enable the State to identify individuals, businesses and others who have been delinquent in filing tax returns or may have understated their tax liabilities and to generally identify persons affected by the taxes administered by the State Commissioner of Taxation and Finance. The information will be used for tax administration purposes and for any other purpose authorized by law.

The above personal information is maintained at the New York State Thruway Authority, Department of Finance and Accounts, P.O. Box 189, Albany, New York 12201.

11. **EQUAL EMPLOYMENT OPPORTUNITIES FOR MINORITIES AND WOMEN**. In accordance with State Executive Law §312, if this contract is: (i) a written agreement or purchase order instrument, providing for a total expenditure in excess of $25,000, whereby the Authority is committed to expend or does expend funds in return for labor, services, supplies, equipment, materials or any combination of the foregoing, to be performed for, or rendered or furnished to the Authority; or (ii) a written agreement in excess of $100,000 whereby the Authority is committed to expend or does expend funds for the acquisition, construction, demolition, replacement, major repair or renovation of real property and improvements thereon; or (iii) a written agreement in excess of $100,000 whereby the owner of a State assisted housing project is committed to expend or does expend funds for the acquisition, construction, demolition, replacement, or major repair or renovation of real property and improvements thereon for such project, then the following shall apply and by signing this contract the Contractor certifies and affirms that it is Contractor's equal employment opportunity policy that:

(a) The Contractor will not discriminate against employees or applicants for employment because of race, creed, color, national origin, sex, age, disability, or marital status, and shall make and document its conscientious and active efforts to

employ and utilize minority group members and women in its work force on Authority contracts and will undertake or continue existing programs of affirmative action to ensure that minority group members and women are afforded equal employment opportunities without discrimination. As used in this clause, "affirmative action" shall mean recruitment, employment, job assignment, promotion, upgrading, demotion, transfer, lay-off or termination, and rates of pay or other forms of compensation.

(b) At the request of the Authority, the Contractor shall request each employment agency, labor union, or authorized representative of workers with which it has a collective bargaining or other agreement or understanding, to furnish a written statement that such employment agency, labor union or representative will not discriminate on the basis of race, creed, color, national origin, sex, age, disability or marital status, and that such union or representative will affirmatively cooperate in the implementation of the Contractor's obligations herein.

(c) The Contractor shall state, in all solicitations or advertisements for employees, that in the performance of this contract all qualified applicants will be afforded equal employment opportunities without discrimination because of race, creed, color, national origin, sex, age, disability or marital status.

The Contractor shall include the provisions of (a), (b) and (c) above in every subcontract over $25,000 for the construction, demolition, replacement, major repair, renovation, planning or design of real property and improvements thereon except where such work is for the beneficial use of the Contractor. Section 312 does not apply to: (i) work, goods or services unrelated to this contract; or (ii) employment outside New York State. The Authority will consider compliance by a Contractor or its subcontractor with the requirements of any Federal law concerning equal employment opportunity which effectuates the purpose of this section. The Authority shall determine whether the imposition of the requirements of the provisions hereof duplicate or conflict with any such Federal law, and if such duplication or conflict exists, the Authority may waive the applicability of §312 of the Executive Law to the extent of such duplication or conflict. The Contractor shall comply with all duly promulgated and lawful rules and regulations of the Department of Economic Development's Division of Minority and Women's Business Development pertaining thereto.

12. **CONFLICTING TERMS**. In the event of a conflict between the terms of the contract (including any and all attachments thereto and amendments thereof) and the terms of this Appendix A, the terms of this Appendix A shall control.

13. **GOVERNING LAW**. This contract shall be governed by the laws of the State of New York except where the Federal supremacy clause requires otherwise.

14. **LATE PAYMENT**. Timeliness of payment and any interest to be paid to the Contractor for late payment shall be governed by State Public Authorities Law §2880 and 21 NYCRR Part 109.

15. **NO ARBITRATION**. Disputes involving this contract, including the breach or alleged breach thereof, may not be submitted to binding arbitration (except where statutorily authorized) but must, instead, be heard in a court of competent jurisdiction of the State of New York.

16. **SERVICE OF PROCESS**. In addition to the methods of service allowed by the State Civil Practice Law & Rules, the Contractor hereby consents to service of process upon it by registered or certified mail, return receipt requested. Service hereunder shall be complete upon the Contractor's actual receipt of process or upon the Authority's receipt of the return thereof by the United States Postal Service as refused or undeliverable. The Contractor must promptly notify the Authority, in writing, of each and every change of address to which service of process can be made. Service by the Authority to the last known address shall be sufficient. The Contractor will have thirty (30) calendar days after service hereunder is complete in which to respond.

17. **PROHIBITION ON PURCHASE OF TROPICAL HARDWOODS**. The Contractor certifies and warrants that all wood products to be used under this contract will be in accordance with, but not limited to, the specifications and provisions of State Finance Law §165 (Use of Tropical Hardwoods) which prohibits purchase and use of tropical hardwoods, unless specifically exempted, by the State or any governmental agency or political subdivision or public benefit corporation. Qualification for an exemption under this law will be the responsibility of the Contractor to establish to meet with the approval of the Authority.

In addition, when any portion of this contract involving the use of woods, whether supply or installation, is to be performed by any subcontractor, the prime Contractor will indicate and certify in the submitted bid proposal that the subcontractor has been informed and is in compliance with specifications and provisions regarding use of tropical hardwoods as detailed in State Finance Law §165. Any such use must meet with the approval of the Authority; otherwise, the bid may not be considered responsive. Under bidder certifications, proof of qualification for exemption will be the responsibility of the Contractor to meet with the approval of the Authority.

18. **MACBRIDE FAIR EMPLOYMENT PRINCIPLES**. In accordance with the MacBride Fair Employment Principles (Chapter 807 of the Laws of 1992), the Contractor hereby stipulates that the Contractor either (a) has no business operations in Northern Ireland, or (b) shall take lawful steps in good faith to conduct any business operations in Northern Ireland in accordance with the MacBride Fair Employment Principles (as described in State Finance Law §165), and shall

permit independent monitoring of compliance with such principles.

19. **OMNIBUS PROCUREMENT ACT OF 1992**. It is the policy of New York State to maximize opportunities for the participation of New York State business enterprises, including minority and women-owned business enterprises as bidders, subcontractors and suppliers on its procurement contracts.

Information on the availability of New York State subcontractors and suppliers is available from:

NYS Department of Economic Development
Division for Small Business
30 South Pearl Street – 7th Floor
Albany, NY 12245
Phone: (518) 292-5220
Fax: (518) 292-5884
http://www.esd.ny.gov

A directory of certified minority and women-owned business enterprises is available from:

NYS Department of Economic Development Minority and Women's Business Development Division
30 South Pearl Street – 2nd Floor
Albany, NY 12245
Phone: (518) 292-5250
Fax: (518) 292-5803
http://www.esd.ny.gov

The Omnibus Procurement Act of 1992 requires that by signing this bid proposal or contract, as applicable, the Contractor certifies that whenever the total bid amount is greater than $1 million:

(a) The Contractor has made reasonable efforts to encourage the participation of New York State Business Enterprises as suppliers and subcontractors, including certified minority and women-owned business enterprises, on this project, and has retained the documentation of these efforts to be provided upon request to the Authority;

(b) The Contractor has complied with the Federal Equal Opportunity Act of 1972 (P.L. 92-261), as amended;

(c) The Contractor agrees to make reasonable efforts to provide notification to New York State residents of employment opportunities on this project through listing any such positions with the Job Service Division of the NYS Department of Labor, or providing such notification in such manner as is consistent with existing collective bargaining contracts or agreements. The Contractor agrees to document these efforts and to provide said documentation to the Authority upon request; and

(d) The Contractor acknowledges notice that the Authority may seek to obtain offset credits from foreign countries as a result of this contract and agrees to cooperate with the Authority in these efforts.

20. **RECIPROCITY AND SANCTIONS PROVISIONS**. Bidders are hereby notified that if their principal place of business is located in a country, nation, province, state or political subdivision that penalizes New York State vendors, and if the goods or services they offer will be substantially produced or performed outside New York State, the Omnibus Procurement Act 1994 and 2000 amendments (Chapters 684 and 383, respectively) require that they be denied contracts which they would otherwise obtain. Contact the Department of Economic Development, Division for Small Business, 30 South Pearl Street, Albany, New York 12245, for a current list of jurisdictions subject to this provision. NOTE: As of October 2019, the list of discriminatory jurisdictions subject to this provision includes the states of South Carolina, Alaska, West Virginia, Wyoming, Louisiana and Hawaii.

21. **NON-PUBLIC PERSONAL INFORMATION**. The Contractor shall comply with the provisions of the New York State Information Security Breach and Notification Act (General Business Law §899-aa; State Technology Law §208). In addition to any relief or damages that may be imposed pursuant to the provisions of this Act, the Contractor shall be liable for the costs imposed upon the Authority which are associated with breach of the Act if caused by Contractor's negligent or willful acts or omissions, or the negligent or willful acts or omissions of the Contractor's agents, officers, employees or subcontractors.

22. **IRAN DIVESTMENT ACT**. In accordance with State Public Authorities Law §2879-c, if this is a contract for work or services performed or to be performed, or goods sold or to be sold, the Contractor subscribes and affirms, under penalty of perjury, that: by signing this contract, each person and each person signing on behalf of any other party certifies, and in the case of a joint bid or partnership each party thereto certifies as to its own organization, under penalty of perjury, that to the best of its knowledge and belief that each person is not on the list created pursuant to paragraph (b) of subdivision 3 of §165-a of the State Finance Law, entitled "Entities Determined to be Non-Responsive Bidders/Offerers pursuant to the New York State Iran Divestment Act of 2012" ("Prohibited Entities List") posted at: https://ogs.ny.gov/list-entities-determined-be-non-responsive-biddersofferers-pursuant-nys-iran-divestment-act-2012.

For the purposes of this clause, the term "person" shall be as defined in subdivision (1)(e) of §165-a of the State Finance Law.

Contractor further certifies that it will not utilize on this contract any subcontractor that is identified on the Prohibited Entities List. Contractor agrees that should it seek to renew or extend this contract, it must provide the same certification at the time the contract is renewed or extended. Contractor also

agrees that any proposed Assignee of this contract will be required to certify that it is not on the Prohibited Entities List before the contract assignment will be approved by the Authority.

During the term of the contract, should the Authority receive information that a person (as defined in State Finance Law § 165-a) is in violation of the above-referenced certifications, the Authority will review such information and offer the person an opportunity to respond. If the person fails to demonstrate that it has ceased its engagement in the investment activity which is in violation of the Act within 90 days after the determination of such violation, then the Authority shall take such action as may be appropriate and provided for by law, rule, or contract, including, but not limited to, imposing sanctions, seeking compliance, recovering damages, or declaring the Contractor in default.

23. **OBSERVANCE OF LAWS**. The Contractor agrees to observe all applicable Federal, State and local laws and regulations, and to procure all necessary licenses and permits.

24. **NO WAIVER OF PROVISIONS**. The Authority's failure to exercise or delay in exercising any right or remedy under this contract shall not constitute a waiver of such right or remedy or any other right or remedy set forth therein. No waiver by the Authority of any right or remedy under this contract shall be effective unless made in a writing duly executed by an authorized officer of the Authority, and such waiver shall be limited to the specific instance so written and shall not constitute a waiver of such right or remedy in the future or of any other right or remedy under this contract.

25. **ENTIRE AGREEMENT**. This contract, together with this Appendix A and any other appendices, attachments, schedules or exhibits, constitutes the entire understanding between the parties and there are no other oral or extrinsic understandings of any kind between the parties. This contract may not be changed or modified in any manner except by a subsequent writing, duly executed by the parties thereto.

26. **ADMISSIBILITY OF REPRODUCTION OF CONTRACT.** Notwithstanding the best evidence rule or any other legal principle or rule of evidence to the contrary, the Contractor acknowledges and agrees that it waives any and all objections to the admissibility into evidence at any court proceeding or to the use at any examination before trial of an electronic reproduction of this contract, in the form approved by the State Comptroller, if such approval was required, regardless of whether the original of said contract is in existence.

27. **CERTIFICATION OF REGISTRATION TO COLLECT SALES AND COMPENSATING USE TAX BY CERTAIN STATE CONTRACTORS, AFFILIATES AND SUBCONTRACTORS.** To the extent this agreement is a contract as defined by Tax Law § 5-a, if the Contractor fails to make the certification required by Tax Law § 5-a or if during the term of the contract, the Department of Taxation and Finance or the Authority, as defined by Tax Law § 5-a, discovers that the certification, made under penalty of perjury, is false, then such failure to file or false certification shall be a material breach of this contract and this contract may be terminated, by providing written notification to the Contractor in accordance with the terms of the agreement, if the Authority determines that such action is in the best interest of the Authority.

28. **CONTRACT INVOLVING STEEL PRODUCTS**. Contracts involving steel products are subject to Public Authorities Law § 2603-a, and steel products to be provided or incorporated by Contractor must be produced or made in whole or substantial part in the United States as set forth therein.

TAP-335 (11/2020)

New York State Thruway Authority

Guidelines Regarding Permissible Contacts During a Procurement and the Prohibition of Inappropriate Lobbying Influence

Chapter 1 of the Laws of 2005, as amended (referred to as the "Lobbying Law"), enacted major changes to the Legislative Law and State Finance Law relative to lobbying on government procurements and procurement contracts. The Lobbying Law created two new sections in the State Finance Law: Section 139-j addresses restrictions on "contacts" during the procurement process; and Section 139-k addresses the disclosure of contacts and the responsibility of offerers[1] during the procurement process. In this regard, a procurement contract means a contract or agreement (including an amendment, extension, renewal or change order to an existing contract where such amendment, extension, renewal or change order is not authorized and payable under the terms of the contract) involving an estimated annual expenditure in excess of $15,000 for a commodity, service, technology, public work or construction; purchase, sale, lease or acquisition of real property; or revenue contract.

In conformity with the Lobbying Law, during the restricted period[2] for an Authority procurement, an offerer may only make permissible "contacts" regarding such procurement, which means that the offerer shall contact only the Authority designated contact person(s) for that procurement. In this regard, "contact" means any oral, written or electronic communication with a governmental entity under circumstances where a reasonable person would infer that the communication was intended to influence the governmental entity's conduct or decision regarding the Authority procurement. Exceptions to this rule include:

- submission of a written proposal in response to a Request for Proposals (RFP), Invitation for Bids (IFB) or any other solicitation method;
- submission of written questions as part of an RFP, IFB or other solicitation method where all written questions and written responses will be provided to all offerers;
- participation in a pre-proposal or pre-bid demonstration, conference or other exchange of information open to all bidders scheduled as part of an RFP, IFB or other solicitation process;

---

[1] An individual or entity, or any employee, agent, consultant or person acting on behalf of such individual or entity, that contacts the Authority about a procurement during the restricted period whether or not the caller has a financial interest in the outcome of the procurement. A governmental agency or its employees that communicates with the Authority regarding a procurement in the exercise of its oversight duties shall not be considered an offerer.

[2] The period of time commencing with the earliest written notice, advertisement or solicitation of a Request for Proposals (RFP), Invitation for Bids (IFB), or solicitation of proposals, or any other method for soliciting responses from offerers intending to result in a procurement contract with the Authority, and ending with the final contract award and approval by the Authority, and, where applicable, the State Comptroller.

- written complaints that the Authority designated contact for a procurement fails to respond in a timely manner to authorized offerer contacts;
- negotiation of procurement contract terms with the Authority following tentative award;
- contacts between designated Authority staff and an offerer to request the review of a procurement contract award;
- communications with the Authority regarding an appeal, protest or other review of a procurement, participation in an administrative or judicial proceeding regarding a procurement and complaints regarding a procurement made to the Attorney General, Inspector General, District Attorney or State Comptroller;
- communications between Authority staff and offerers that solely address the determination of vendor responsibility.
- communications relating to the Authority's procurement made pursuant to State Finance Law Section 162(1) undertaken by (i) the non-profit-making agencies appointed pursuant to Section 162(6)(e) by the Commissioner of the Office of Children and Family Services, the Commission for the Blind or the Commissioner of Education, and (ii) the qualified charitable non-profit-making agencies for the blind, and qualified charitable non-profit-making agencies for other severely disabled persons as identified in Section 162(2); provided, however, that any communications which attempt to influence the issuance or terms of the specifications that serve as the basis or bid documents, RFPs, IFBs, solicitations of proposals, or any other method for soliciting a response from offerers intending to result in a procurement contract with the Authority shall not be exempt;
- complaints by a Minority and Women-owned Business Enterprise (MWBE) entity to the MWBE statewide advocate concerning the Authority's failure to comply with the requirements of Executive Law Section 315; and,
- communications between the MWBE statewide advocate and the Authority in furtherance of the MWBE statewide advocate pursuant to Executive Law Section 312-a.

An offerer shall not, under any circumstance, attempt to influence an Authority procurement in a way that violates or attempts to violate: Public Officers Law Section 73(5), relating to gifts intended to influence; or Public Officers Law Section 74, relating to the code of ethics for employees of state agencies, public authorities and public benefit corporations, members of the New York State Legislature and Legislative employees.

An offerer who contacts the Authority designated contact person for a procurement during the restricted period must be prepared to provide the following information: name, address, telephone number, place of principal employment and occupation of the person or organization making the contact and whether the person/organization making the contact is the offerer or is retained, employed or designated by or on behalf of the offerer to appear before or contact the Authority about the procurement.

An offerer that submits a proposal, bid or other response to an Authority RFP, IFB or other solicitation method must: certify that it understands and agrees to comply with these Guidelines regarding permissible contacts during a procurement and the prohibition of inappropriate lobbying influence; and disclose whether any governmental entity has, within the prior four (4) years, found the offerer non-responsible due to a violation of the Lobbying Law or the intentional provision of false or incomplete information. Further, all Authority procurement contracts will contain: a certification by the offerer that all information provided to the Authority

with respect to the Lobbying Law is complete, true and accurate; and a provision authorizing the Authority to terminate the contract in the event such certification is found to be intentionally false or incomplete.

The Authority will investigate all allegations of violations of the Authority Guidelines regarding permissible contacts during a procurement and the prohibition of inappropriate lobbying influence. A finding that an offerer has knowingly and willfully committed such a violation may result in a determination that the offerer and its subsidiaries are non-responsible and therefore ineligible for award of the procurement contract. A second determination of non-responsibility for such a violation within four (4) years of the first such determination shall render the offerer and its subsidiaries ineligible to submit a bid or proposal or be awarded a procurement contract for four (4) years from the date of the second determination. The Authority will notify the New York State Office of General Services of any determinations of non-responsibility or debarments due to violations of the Lobbying Law.

These Guidelines and related forms are available on the Authority's website, www.thruway.ny.gov, under Doing Business; Purchasing Services - Law, Policies and Procedures. Copies of Sections 73 and 74 of the Public Officer's Law are also available on the Joint Commission on Public Ethics website, www.jcope.ny.gov, under Laws. If you require further guidance on the Lobbying Law, you are encouraged to visit the Advisory Council on Procurement Lobbying website at https://ogs.ny.gov/acpl, where the Lobbying Law and the Guidelines on Procurement Lobbying (Frequently Asked Questions) adopted by the Council are posted.

TA-E32113 (11/97)

NEW YORK STATE THRUWAY AUTHORITY
200 Southern Boulevard
Albany, NY 12209

BUREAU OF PURCHASING
Fax 518/471-4442

June 21, 2023

BID SUBMISSION PACKAGE

IFB: 22038-909.37 NYS Thruway Headquarters Entrance Doors	**Inquiries To:** David Coffey 518-436-2731 **E-mail**: David.Coffey@thruway.ny.gov
Time and Date of Bid Opening: 1:00 p.m., July 13, 2023	**Time and Date of Prebid Meeting:** 11:00 a.m., June 29, 2023 at NYS Thruway HQ, 200 Southern Blvd., Albany NY 12209
Sealed bids to furnish & install: NYS Thruway Headquarters Entrance Doors at 200 Southern Boulevard, Albany NY 12209 per detailed specifications.	
Contract Period: Prompt Delivery and Installation	

INSTRUCTIONS/INFORMATION

1. Place and seal your bid in an envelope. Show your return address in the upper left corner. If you have downloaded this document from the Internet, follow the instructions for submission in the downloaded document package.

2. IF YOU ARE NOT BIDDING, please note your response below, furnish the firm name and an authorized signature, and return only this sheet in an envelope. Follow the instructions for submission in the downloaded document package.

☐ NO BID because we cannot furnish the product/service specified. Please delete us from the list of bidders for this commodity group. (No other commodity group will be affected.)

☐ NO BID for the following reason: _____

BY SUBMISSION OF THIS BID, THE BIDDER AGREES:

1. Bidder's signature indicates full knowledge and acceptance of all of the requirements of this IFB (to include but not be limited to the Terms and Conditions, General Specification, Appendix A, Detailed Specification and any addenda). The bidder must be an authorized individual of the bidding firm, and the firm's name must be shown below on this form.

2. In accordance with State Public Authorities Law §2878, Bidder certifies, under penalty of perjury, that its bid was arrived at independently and without collusion aimed at restricting competition.

Firm Name	Federal Tax ID No.
Street Address	City/State/Zip
Area Code/Telephone(Toll free # if available)	Fax / E-mail
Print Name	Title
Signature	Date

I acknowledge and agree that this bid constitutes a firm offer for a period of NINETY (90) DAYS after the bid opening date.

_____ _____

BID SUBMISSION PACKAGE

NOTE: Some letter/parcel carriers have been experiencing delays in their deliveries. Please take this into account when planning the submission of your bid.

Qty	U/M	Total Price
1	Job	$_____

ITEM 1:

Item 1: Remove existing storefront Framing & Doors & Glass & Furnish & Install Aluminum Doors & Frames, Closer Motors & Push Plates per attached plans. Two openings at each end of bridge, each has (1) one pair of 6'0" X 7'0" doors with single 32" doors on each side with Transcoms 149" X 99.5". Also all electrical assembling and disassembling to be completed as well.

This work must be done on weekends during the day. Work can began as early as 6am & continue until the building is secured. Contractor must coordinate work with Site Supervisor minimum 48 hours prior to start of work. Thruway site Supervisor or designee will be present while work is performed.

Total Price for Item 1 : $_____

Guaranteed delivery and installation after receipt of order _____calendar days

Guarantee Period: _____

Manufacturer's make/model number of product to be installed : _____

Location of manufacturer's plant: _____

PRICE ADDITIONAL

Note: Out of line pricing may be cause to reject your bid.

References

List below information relative to three previous contracts of type and size similar to this solicitation:

1. Firm Name: _____

   Person to Contact: _____

   Street Address: _____

   City & State: _____

   Telephone: (_____) _____

2. Firm Name: _____

   Person to Contact: _____

   Street Address: _____

   City & State: _____

   Telephone: (_____) _____

3. Firm Name: _____

   Person to Contact: _____

   Street Address: _____

   City & State: _____

   Telephone: (_____) _____

Failure to answer the following questions will delay the evaluation of your bid and may result in rejection of your bid.

DISCOUNT

Bidder agrees to the following cash discount for payment within 30 days of delivery at destination and/or receipt of voucher:

_____% 30 day

COMPLIANCE

Is this entire bid strictly in accordance with the DETAILED SPECIFICATIONS?

Yes_____ No_____

If no, explain all deviations in detail:_____

_____

_____

PRICING

Are the prices offered in this bid the same as or lower than those quoted other corporations or government agencies on similar requirements?

Yes_____ No_____

If no, explain: _____

_____

_____

PRE-BID MEETING

If applicable, did a representative from the Bidder's firm attend the pre-bid meeting?

Yes_____ No_____ N/A _____

"NONDISCRIMINATION IN EMPLOYMENT IN NORTHERN IRELAND:
MacBRIDE FAIR EMPLOYMENT PRINCIPALS"

In accordance with Section 165 of the State Finance Law, the bidder, by submission of this bid, certifies that it or any individual or legal entity in which the bidder holds a 10% of greater ownership interest, or any individual or legal entity that holds a 10% or greater ownership interest in the bidder, either (answer Yes or No to one or both of the following, as applicable):

a. has a business operation in Northern Ireland:

Yes_____ No_____

if yes,

b. shall take lawful steps in good faith to conduct any business operations in Northern Ireland in accordance with the MacBride Fair Employment Principles relating to non-discrimination in employment and freedom of workplace opportunity regarding such operations in Northern Ireland, and shall permit independent monitoring of compliance with such Principles.

Yes_____ No_____

Bidders, please note:

You must complete and submit with your bid the following attached forms:

1. "Disclosure of Prior Non-Responsibility Determinations", form TA-W3053 (04/2019).
2. "Certificate of Compliance With the Authority Guidelines Regarding Permissible Contacts During A Procurement And The Prohibition Of Inappropriate Lobbying Influence", form TA-W2111 (04/2019).
3. Conducting Business in Russia Certification (Attachment 4)- "Certification Under Executive Order No. 16 Prohibiting State Agencies and Authorities from Contracting with Businesses Conducting Business in Russa"

TA-W51343 (11/2017)

NEW YORK STATE OF OPPORTUNITY. | Thruway Authority

SUPPLEMENTAL INSURANCE CERTIFICATE

This form supplements ACORD 25 CERTIFICATE OF LIABILITY INSURANCE documentation as required by the NYSTA. For additional information, please contact the NYSTA's Insurance Compliance Section at (518) 436-2891.

Insured: _____

All Work under NYSTA Project/Agreement/Permit No.: _____
(If NYSTA Permit, leave blank unless Permit No. is known)

Complete/check appropriate boxes:

	Yes	No
I. **Commercial General Liability (CGL) Insurance - Policy No.** _____		
a. Does the General Aggregate reflect a per-project aggregate endorsement (CG 25 03 05 09 or equivalent)?	☐	☐
b. Does the CGL provide coverage for:		
1. Explosion, Collapse and Underground Hazards (XCU)?	☐	☐
2. Products & Completed Operations Liability?	☐	☐
3. Additional Insureds for claims involving injury to employees of the Named Insured or subcontractors?	☐	☐
4. Is Cross liability in the ISO GL policy (i.e., Insured vs. Insured suits) excluded?	☐	☐
If "No", is Cross liability in the ISO GL policy restricted?	☐	☐
5. Property damage to work due to Independent contractor's (subcontractor's) operations?	☐	☐
c. Is the CGL policy written on ISO form CG 00 01 04 13 or an equivalent form?	☐	☐
II. **Workers' Compensation - Policy No.** _____		
a. Does Workers' Comp. apply to federally-regulated employment (i.e., Jones Act, USL&H)?	☐	☐
b. Is Workers' Comp. from a New York State authorized insurer?	☐	☐
c. If sole proprietorship, partnership, or corporation with one or two shareholders, is Workers' Comp. coverage provided for owners?	☐	☐
III. **Environmental Insurance (EI)** (including Asbestos & Lead Abatement) - **Policy No.** _____		
Professional Liability Insurance (PLI) (including Errors & Omissions) - **Policy No.** _____		
a. Do EI defense costs reduce liability limits?	☐	☐
b. If EI is on a claims-made basis, what is the retroactive date? _____		
c. Do PLI defense costs reduce liability limits?	☐	☐
d. If PLI is on a claims-made basis, what is the retroactive date? _____		
IV. **Mandatory Endorsements and Other Provisions** (all policies including auto liability)		
a. Is the NYSTA listed as an Additional Insured by ISO endorsement CG 20 10 04 13 and CG 20 37 04 13 or an equivalent, under the CGL and Umbrella policies?	☐	☐
b. Are the Umbrella and/or Excess Liability insurance policies issued on a "stand alone" or "follow form basis" to the primary CGL, Commercial Auto and/or Employer's Liability? Identify for each policy:		
Umbrella Policy No._____ Stand Alone ☐ Follow Form ☐ No Policy ☐		
Excess Policy No. _____ Stand Alone ☐ Follow Form ☐ No Policy ☐		
c. Are all policies endorsed to provide 30 days advance notice to the NYSTA of termination/material change, except for non-payment/cancellation?	☐	☐
If "No", identify policies that are not endorsed: _____		
d. Do any of the policies on the attached ACORD 25 contain a Deductible (D) or Self-Insured Retention (SIR)?	☐	☐
If "Yes", indicate the specific policy, whether D or SIR, its amount, and whether it is on a per claim, per occurrence or aggregate basis: _____		
e. Is the Automobile Liability policy endorsed to include ***either*** ISO endorsement CA 99 48 03 06 - Pollution Liability - Broadened Coverage for Covered Autos-Business Auto, Motor Carrier and Truckers Coverage Forms ***or*** ISO endorsement CA 00 12 03 06 - Truckers Coverage Forms?	☐	☐

This certificate is issued as a matter of information only. The information provided herein accurately describes the policies listed above; and does not affirmatively or negatively amend, extend or alter the coverage afforded by the policies listed above. The insurance afforded by the policies described herein is subject to all the terms, exclusions and conditions of such policies.

Signed: _____ Date: _____

Print Name: _____

☐ Insurer's Agent

Title: _____ ☐ Insurance Broker

Firm Name: _____

Mailing Address: _____ Fax No.: ( ) -

_____ Email: _____

TA-W3053 (04/2019)

200 Southern Blvd.
Albany, NY 12209

New York State Finance Law Sections 139-j and 139-k

Disclosure of Prior Non-Responsibility Determinations

Contract/Project/Transaction Description:

_____

_____

Contract # (if applicable): _____ Date: _____

Name of Offerer/Applicant: _____

Address: _____

Name and Title of Person Submitting this Form
(if different from above): _____

Has any governmental entity* made a finding of non-responsibility regarding the Offerer/Applicant in the previous four years where:

the basis for the finding of the Offerer/Applicant's non-responsibility was due to a violation of State Finance Law Section 139-j? ☐ No ☐ Yes

the basis for the finding of the Offerer/Applicant's non-responsibility was due to the intentional provision of false or incomplete information to a governmental entity? ☐ No ☐ Yes

If yes, please provide details regarding the finding of non-responsibility below.

Governmental Entity: _____

Date of Finding of Non-responsibility: _____

Basis of Finding of Non-responsibility (attach additional sheets if necessary):

_____

_____

_____

_____

_____

_____

Offerer certifies that all information provided to the Governmental Entity with respect to State Finance Law Section 139-k is complete, true and accurate.

By: _____
Signature

_____
Date

_____
Name (please print)

( ) -
Telephone No.

_____
Title

* A "governmental entity" is: (1) any department, board, bureau, commission, division, office, council, committee or officer of New York State, whether permanent or temporary; (2) each house of the New York State Legislature; (3) the unified court system; (4) any public authority, public benefit corporation or commission created by or existing pursuant to the Public Authorities Law; (5) any public authority or public benefit corporation, at least one of whose members is appointed by the Governor or who serves as a member by virtue of holding a civil office of the State; (6) a municipal agency, as that term is defined in paragraph (ii) of subdivision (s) of section one-c of the Legislative Law; or (7) a subsidiary or affiliate of such a public authority.

For engineering agreements and construction contracts, submit this form to the Department of Engineering, 200 Southern Blvd., Albany, 12209. All other form submissions should be forwarded to the address listed on the solicitation material or application.

If you have any questions, please call the contact person listed on the solicitation material or application.

TA-W2111 (04/2019)

200 Southern Blvd.
Albany, NY 12209

CERTIFICATE OF COMPLIANCE WITH THE AUTHORITY GUIDELINES REGARDING PERMISSIBLE CONTACTS DURING A PROCUREMENT AND THE PROHIBITION OF INAPPROPRIATE LOBBYING INFLUENCE

To protect the integrity and fairness of the procurement process and maintain public confidence in the Thruway Authority's (Authority) stewardship role, all Authority procurement decisions must be based on the merits of proposals, free of any inappropriate lobbying influence. Toward that end, the Authority has adopted Guidelines Regarding Permissible Contacts During a Procurement and the Prohibition of Inappropriate Lobbying Influence (TAP-335), Guidelines with which all vendors/firms/proposers must comply. A copy of these Guidelines is available in the Purchasing Services section of the Authority's website at www.thruway.ny.gov. Further, Authority funds may not be used to reimburse a vendor/firm for its outside lobbying expenses. Authority payments made under a contract cannot be used to pay outside lobbying costs and a vendor/firm is prohibited from seeking reimbursement of such costs.

Certification

The undersigned certifies that the vendor/firm/proposer has read, understands and agrees to comply with the Authority Guidelines Regarding Permissible Contacts During a Procurement and the Prohibition of Inappropriate Lobbying Influence (TAP-335). Further, the undersigned certifies that the vendor/firm/proposer will not utilize Authority payments made under a contract or agreement, including an amendment, extension, renewal or change order to an existing contract, to pay outside lobbying expenses and will not seek reimbursement of such costs. The undersigned also certifies that he or she is authorized to bind the vendor/firm/proposer contractually.

Contract No.	Description
Vendor/Firm Name	Telephone No.
Print Name	Title
Signature	Date

Certification Under Executive Order No. 16 Prohibiting State Agencies and Authorities from Contracting with Businesses Conducting Business in Russia

Executive Order No. 16 provides that "all Affected State Entities are directed to refrain from entering into any new contract or renewing any existing contract with an entity conducting business operations in Russia." The complete text of Executive Order No. 16 can be found here.

The Executive Order remains in effect while sanctions imposed by the federal government are in effect. Accordingly, vendors who may be excluded from award because of current business operations in Russia are nevertheless encouraged to respond to solicitations to preserve their contracting opportunities in case the sanctions are lifted during a solicitation or even after award in the case of some solicitations.

As defined in Executive Order No. 16, an "entity conducting business operations in Russia" means an institution or company, wherever located, conducting any commercial activity in Russia or transacting business with the Russian Government or with commercial entities headquartered in Russia or with their principal place of business in Russia in the form of contracting, sales, purchasing, investment, or any business partnership.

Is Vendor an entity conducting business operations in Russia, as defined above? Please answer by checking one of the following boxes:

☐ 1. No, Vendor does not conduct business operations in Russia within the meaning of Executive Order No. 16.

☐ 2.a. Yes, Vendor conducts business operations in Russia within the meaning of Executive Order No. 16 but has taken steps to wind down business operations in Russia or is in the process of winding down business operations in Russia. (Please provide a detailed description of the wind down process and a schedule for completion.)

☐ 2.b. Yes, Vendor conducts business operations in Russia within the meaning of Executive Order No. 16 but only to the extent necessary to provide vital health and safety services within Russia or to comply with federal law, regulations, executive orders, or directives. (Please provide a detailed description of the services being provided or the relevant laws, regulations, etc.)

☐ 3. Yes, Vendor conducts business operations in Russia within the meaning of Executive Order No. 16.

The undersigned certifies under penalties of perjury that they are knowledgeable about the Vendor's business and operations and that the answer provided herein is true to the best of their knowledge and belief.

Vendor Name: (legal entity) _____

By: (signature) _____

Name: _____

Title: _____

Date: _____